YAMAHA

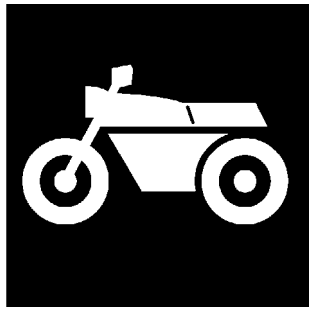

CATALOGO DE REPUESTOS

YZF-R1 (5VY7) SPAIN

1D5VY-352S1

(2D5VY-352S1)

YAMAHA GENUINE Parts & Accessories

A2

YZF-R1
CATALOGO DE REPUESTOS
©2004 por Yamaha Motor Co., Ltd.
1ª edición, octubre 2004
Todos los derechos reservados.
Toda reproducción o uso no autorizado
sin el consentimiento escrito de
Yamaha Motor Co., Ltd.
quedan expresamente prohibidos
Impreso en Japón.

A3

YZF-R1

A4

PROLOGO

Este catálogo de repuestos corresponde a las piezas para el o los modelos que figuran en la página de portada. Al formular el pedido de repuestos, se ruega citar este catálogo y especificar correctamente el número y el nombre de las piezas.

1. Las modificaciones y agregados que se hayan realizado después de la edición de este Catálogo de Repuestos, serán anunciados en las Informaciones de Recambios.
   Es recomendable que se hagan las correcciones necesarias en el Catálogo de Repuestos de acuerdo con las Informaciones de Recambios.

2. Abreviaciones
   En este. Catálogo de Repuestos se emplean las siguientes abreviaciones.

   "UR" Usar el número de partes especificado
   "UN" Usar la cantidad necesaria
   "AP" Piezas sustitutivas
   "LM" Fabricación local (Hay que pedir los repuestos en las cercanías)
   "F#" Nº de bastidor (Nº aplicable a la máquina)
   "O/S" Sobredimensionado

3. La cantidad de componentes para el montaje
   - Los componentes, suministrados como conjunto, se describen con un punto (.) que precede al nombre del parte como se indica a continuación.
   - La numeración que aparece a la derecha de cada descripción indica la cantidad de partes por cada unidad de conjunto.

CODIGO Nº	DESCRIPCION	CANT.	OBSERVACIONES
2F5–83310–60	ENSAMBLAJE DE LA LUZ	2	
115–83311–60	.BOMBILLA (6V–18W)	1	

4. Los colores de los componentes se indican como sigue en la columna de "OBSERVACIONES".

CODIGO Nº	DESCRIPCION	CANT.	OBSERVACIONES
2N4–24110–00–X5	COMP. DEL TANQUE	2	MXR
3J1–24240–10	.GRAFICO, DEL TANQUE	1	PARA MXR

5. Debe tenerse en cuenta que las ilustraciones sirven como guia para la búsqueda de los números de partes y no deben usarse para el montaje. Durante el montaje, se recomienda usar el manual de taller correspondiente.

6. EL asterisco (*) antes del número de referencia indica los elementos modificados después de la primera edición.

7. Números de serie

Nº de Serie del motor

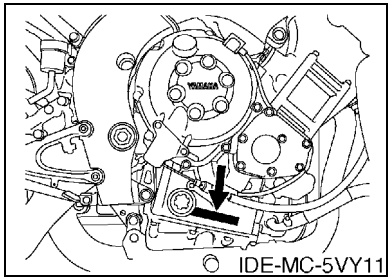

Nº de Serie del bastidor

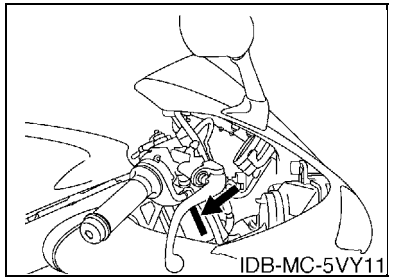

8. Códigos de color aplicables (El símbolo (*) muestra el color de modelo.)

Abreviatura	Nombre de color	Código de color
BS4(*)	BLUISH SILVER 4	0820
DPBMC(*)	DEEP PURPLISH BLUE METALLIC C	0564
DRMK(*)	DEEP RED METALLIC K	0918
MBL2	MAT BLACK 2	0582
MBM3	MAT BLUE METALLIC 3	0960
MT2	MAT TITAN 2	0826

(1) El rótulo llamada “Rótulo de Modelo” está en la ubicación indicada abajo en el (3). Cuando se utilice este catálogo de repuestos, se ruega cotejar entre el “código de modelo–número de código de producción” del catálogo y el “código de modelo–número de código de producción” indicado en el Rótulo de Modelo fijado en el producto correspondiente.

(2) Indicación del “Rótulo de Modelo”

a b
○ xxxx – xxx
● x c

a: Código de tipo de Modelo
b: Número de código de Producción
c: Tipo de color

○ 4TW1–010
● A

(3) Ubicación de fijación del Rótulo de Modelo

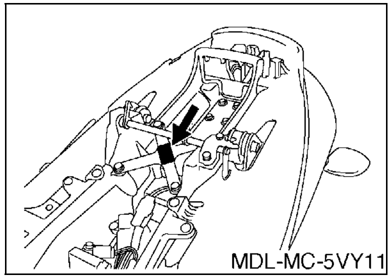

(4) Información de Color

Código de Modelo	Código de tipo de color	Código de color	Nombre de color	Abreviatura
5VY7	A	0918	DEEP RED METALLIC K	DRMK
	B	0564	DEEP PURPLISH BLUE METALLIC C	DPBMC
	C	0820	BLUISH SILVER 4	BS4

(5) Código de Modelo–Número de código de Producción del Modelo Listado en este Catálogo de Repuestos

Código de Modelo	Número de Código de Producción	País (destino)	Código de Modelo	Número de Código de Producción	País (destino)
5VY7	040	SPAIN			

CONTENIDO

MOTOR

CULATA DE CILINDRO B2
CILINDRO B4
CIGUENAL & PISTON B5
VALVULA B6
ARBOL DE LEVAS & CADENA B8
BOMBA DE AGUA B9
RADIADOR & MANGUERA B11
BOMBA DE ACEITE B13
FILTRO ACEITE B14
ADMISION B15
ADMISION 2 ..... C3
SYSTEMA DE INDUCCION DE AIRE C5
DESCARGA C6
CARTER C9
CUBIERTA DE CARTER 1 ..... C10
ARRANQUE C12
EMBRAGUE C13
TRANSMISION C15
LEVA DE CAMBIO & HORQUILLA D3
EJE DE CAMBIO & PEDAL D4

SHASIS

CUADRO D5
GUARDABARRO D7
CUBIERTA LATERAL D10
BRAZO TRASERO D12
SUSPENSION TRASERO D14
DIRECCION D15
HORQUILLA DELANTERA E2
DEPOSITO DE COMBUSTIBLE E4
ASIENTO E7
RUEDA DELANTERA E8
CALIBRE FRENO DELANTERA E9
RUEDA TRASERA E10
CALIBRE FRENO TRASERA E12
MANILLAR & CABLE E13
CILINDRO MAESTRO DELANTERO E14
SOPORTE & APOYAPIE F2
CILINDRO MAESTRO TRASERO F4
BOVEDA 1 ..... F5
BOVEDA 2 ..... F7
GENERADOR F10
MOTOR DE ARRANQUE F11
LUZ DE DESTELLADOR F12
MEDIDOR F13
FARO DELANTERO F14
LUZ DE COLA F15
INTERRUPTOR DE MANILLAR&PALANC G2
EQUIPO ELECTRICO 1 ..... G3
EQUIPO ELECTRICO 2 ..... G5

INDICE

INDICE NUMERICO M1

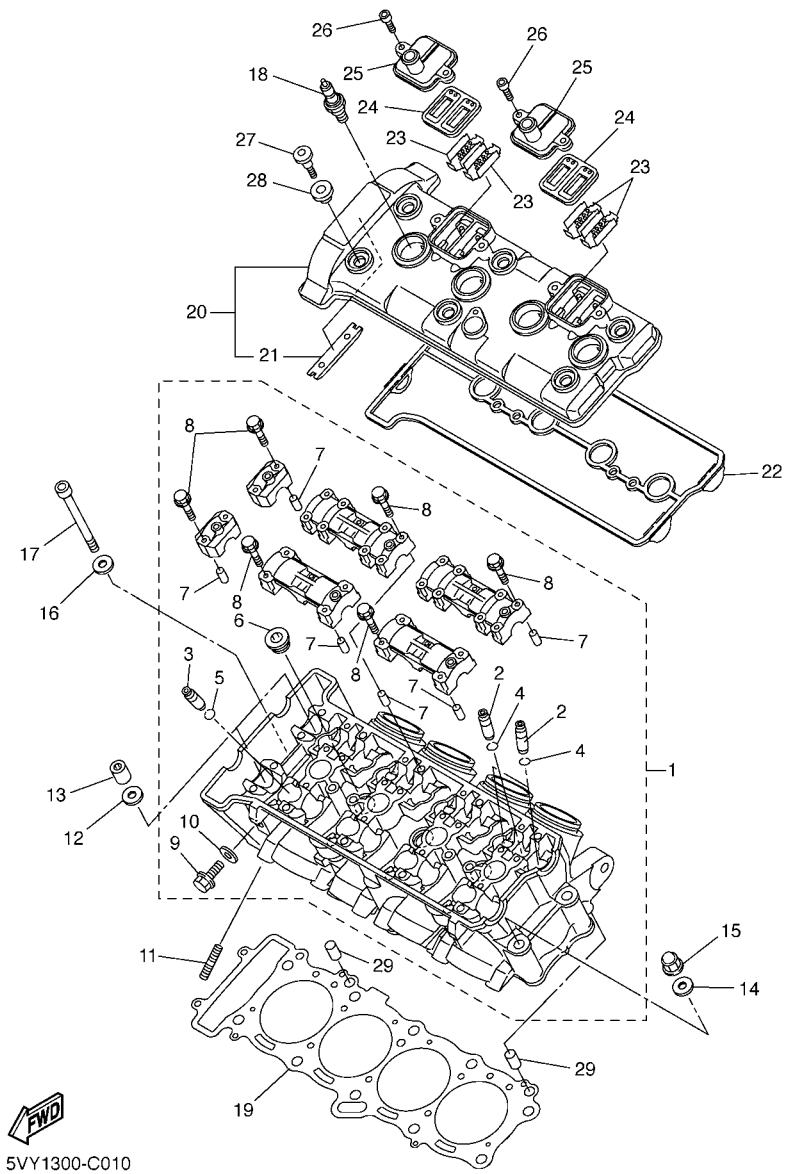

FIG. 1 CULATA DE CILINDRO

REF. Nº	CODIGO Nº	DESCRIPCION	5VY7					OBSERVACIONES
1	5VY–11101–01	CULATA DE CILINDRO COMPLETA	1					
2	5VY–11133–10	.GUIA DE VALVULA 1	12					
3	5VY–11134–10	.GUIA DE VALVULA 2	8					
4	93440–07149	.SEGURO	12					
5	93440–10153	.SEGURO	8					
6	90340–18150	.TORNILLO, DE DRENAJE	3					
7	91808–16023	.PASADOR DE CLAVIJA	6					
8	90105–06026	.TORNILLO	28					
9	95024–06012	.PERNO, DE BRIDA	1					
10	90430–06014	.JUNTA	1					
11	95617–08625	PERNO DE PUNTAL	8					
12	90201–10013	ARANDELA PLANA	8					
13	90179–10006	TUERCA	8					
14	90201–10013	ARANDELA PLANA	2					
15	90176–10075	TUERCA CORONA	2					
16	90201–06016	ARANDELA PLANA	2					
17	91314–06105	PERNO	2					
18	94701–00403	BUJIA (NGK CR9EK)	4					
19	5VY–11181–00	JUNTA, DE CULATA 1	1					
20	5VY–11191–00	TAPA CULATA DE CILINDRO 1	1					
21	5BE–12241–00	.TOPE DE GUIA 2	1					
22	5VY–11193–10	EMPAQUE	1					
23	5VY–1482K–00	PLACA	4					
24	5SL–14890–00	VALVULA DE LENGUETA COMPLETA	2					
25	5VY–14899–00	TAPA, DE CAJA	2					
26	90110–06118	TORNILLO ALLEN	4					
27	90109–066F0	PERNO	6					

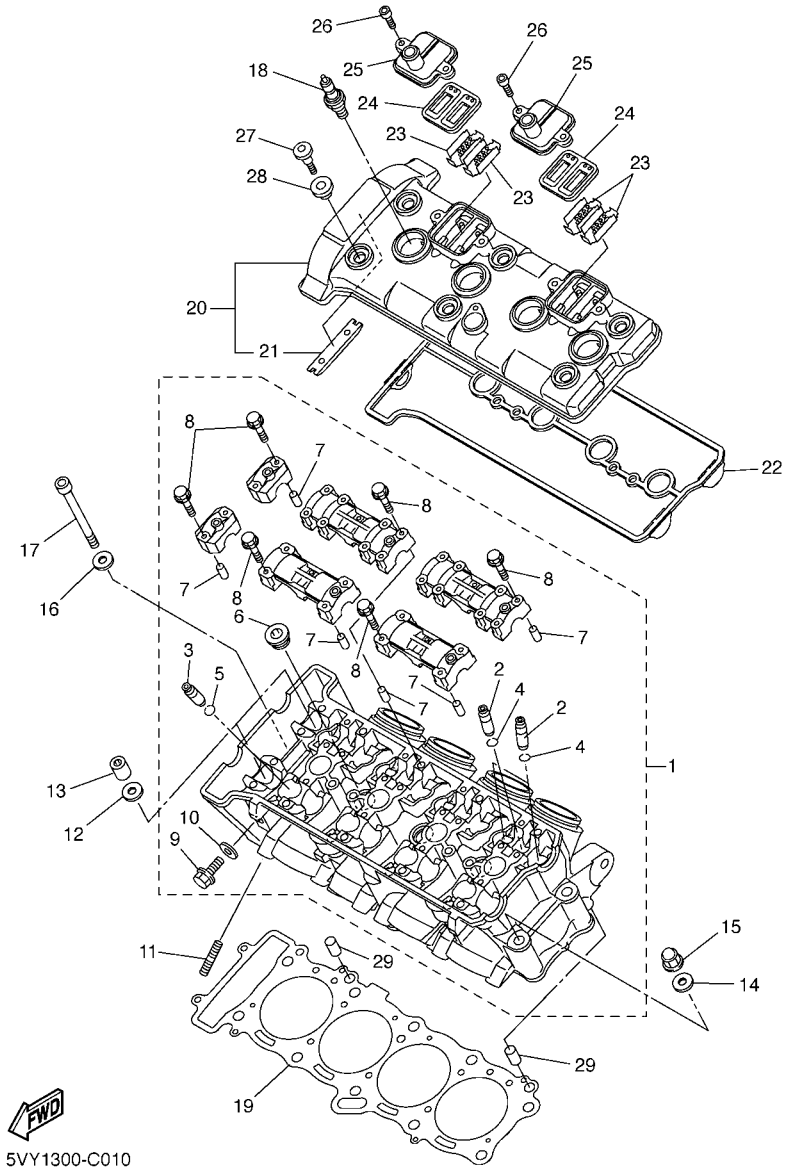

FIG. 1 CULATA DE CILINDRO

REF. Nº	CODIGO Nº	DESCRIPCION	5VY7					OBSERVACIONES
28	5VY–1111G–00	CASQUILLO DE GOMA	6					
29	99530–10114	PASADOR, DE ESPIGA	2					

FIG. 2 CILINDRO

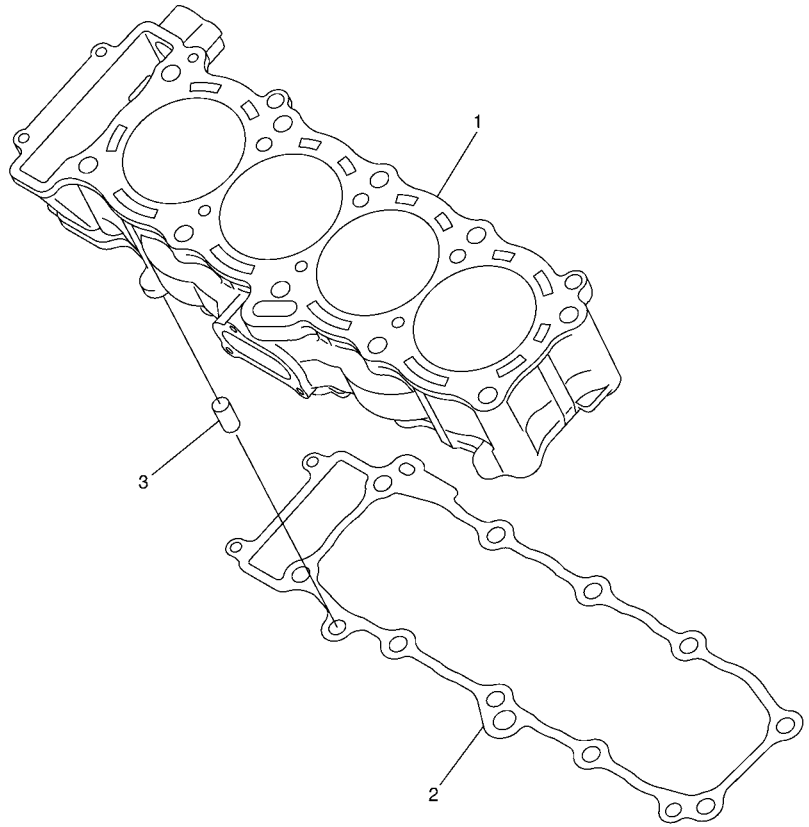

5VY1300-C020

REF. Nº	CODIGO Nº	DESCRIPCION	5VY7					OBSERVACIONES
1	5VY–11311–00	CILINDRO 1	1					
2	5VY–11351–00	JUNTA, DE CILINDRO	1					
3	99530–10114	PASADOR, DE ESPIGA	2					

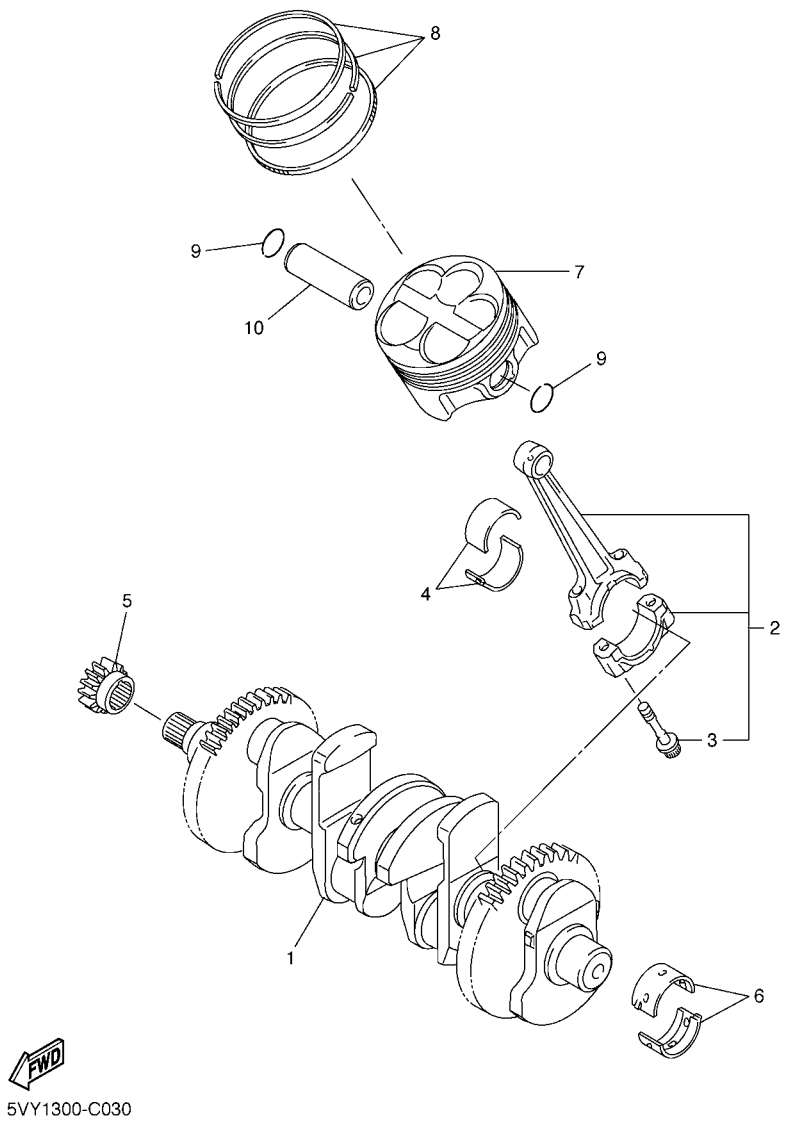

FIG. 3 CIGUENAL & PISTON

REF. Nº	CODIGO Nº	DESCRIPCION	5VY7					OBSERVACIONES
1	5VY–11411–01	CIGUENAL	1					
2	5VY–11650–01	BIELA COMPLETA	4					
3	5VY–11654–01	.TORNILLO DE BIELA	2					
4	5VY–11656–00	COJINETE PLANO	8					UR AZUL
	5VY–11656–10	COJINETE PLANO	8					UR NEGRO
	5VY–11656–20	COJINETE PLANO	8					UR MARRON
	5VY–11656–30	COJINETE PLANO	8					UR VERDE
5	5VY–11549–00	CATALINA CADENA DE LEVA	1					
6	5VY–11416–A0	COJINETE PLANO 1	10					UR BLANCO
	5VY–11416–00	COJINETE PLANO 1	10					UR AZUL
	5VY–11416–10	COJINETE PLANO 1	10					UR NEGRO
	5VY–11416–20	COJINETE PLANO 1	10					UR MARRON
	5VY–11416–30	COJINETE PLANO 1	10					UR VERDE
7	5VY–11631–10	PISTON (NORMA)	4					
8	5VY–11603–01	JUEGO DE ANILLOS (NORMA)	4					
9	90468–12069	PRESILLA	8					
10	5VY–11633–00	PASADOR, PISTON	4					

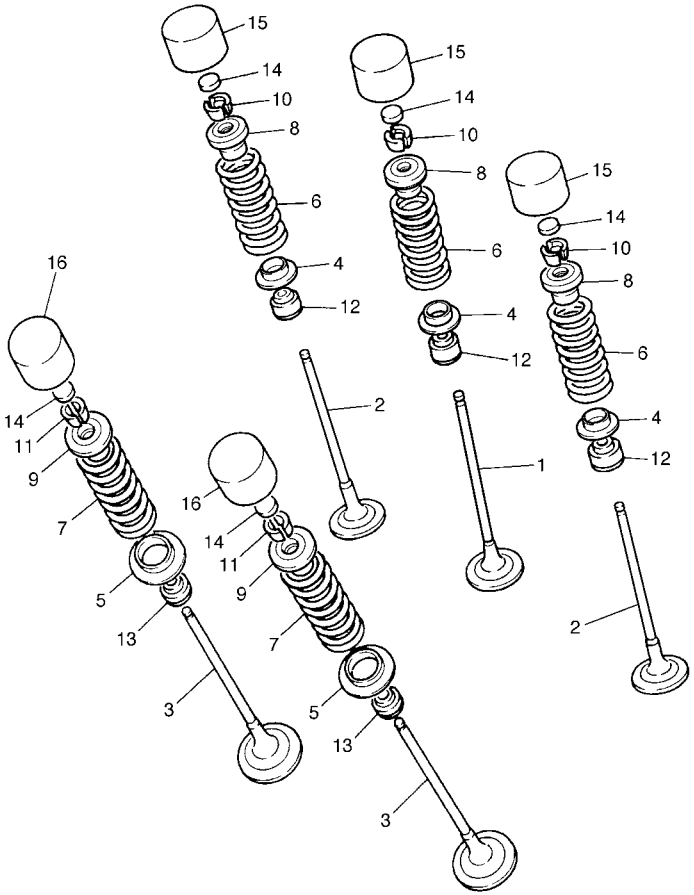

5VY1300-C040

FIG. 4 VALVULA

REF. Nº	CODIGO Nº	DESCRIPCION	5VY7					OBSERVACIONES
1	5VY–12111–00	VALVULA DE ADMISION	4					
2	5VY–12112–00	VALVULA, DE ADMISION 2	8					
3	5VY–12121–00	VALVULA DE ESCAPE	8					
4	5NL–12116–00	ASIENTO RESORTE DE VALVULA	12					
5	3GM–12126–00	ASIENTO RESORTE DE VALVULA2	8					
6	5VY–12113–00	RESORTE VALVULA INTERNA	12					
7	5VY–12114–00	RESORTE VALVULA EXTERIOR	8					
8	5VY–12117–00	RETEN RESORTE DE VALVULA	12					
9	5VY–12127–00	RETEN RESORTE DE VALVULA	8					
10	1HX–12118–00	SEGURO DE VALVULA	24					
11	1WG–12118–00	SEGURO DE VALVULA	16					
12	4TV–12119–00	SELLO DE ACEITE VALVULA	12					
13	4SV–12119–00	SELLO DE ACEITE VALVULA	8					
14	1HX–12168–00	COJIN, AJUSTADOR 2 (1.20)	20					UR
	1HX–12168–20	COJIN, AJUSTADOR 2 (1.25)	20					UR
	1HX–12168–40	COJIN, AJUSTADOR 2 (1.30)	20					UR
	1HX–12168–60	COJIN, AJUSTADOR 2 (1.35)	20					UR
	1HX–12168–80	COJIN, AJUSTADOR 2 (1.40)	20					UR
	1HX–12168–A0	COJIN, AJUSTADOR 2 (1.45)	20					UR
	1HX–12168–F0	COJIN, AJUSTADOR 2 (1.50)	20					UR
	1HX–12168–H1	COJIN, AJUSTADOR 2 (1.55)	20					UR
	1HX–12168–K1	COJIN, AJUSTADOR 2 (1.60)	20					UR
	1HX–12168–M1	COJIN, AJUSTADOR 2 (1.65)	20					UR
	1HX–12168–R1	COJIN, AJUSTADOR 2 (1.70)	20					UR
	1HX–12168–U1	COJIN, AJUSTADOR 2 (1.75)	20					UR
	1HX–12168–W1	COJIN, AJUSTADOR 2 (1.80)	20					UR
	1HX–12168–Y1	COJIN, AJUSTADOR 2 (1.85)	20					UR

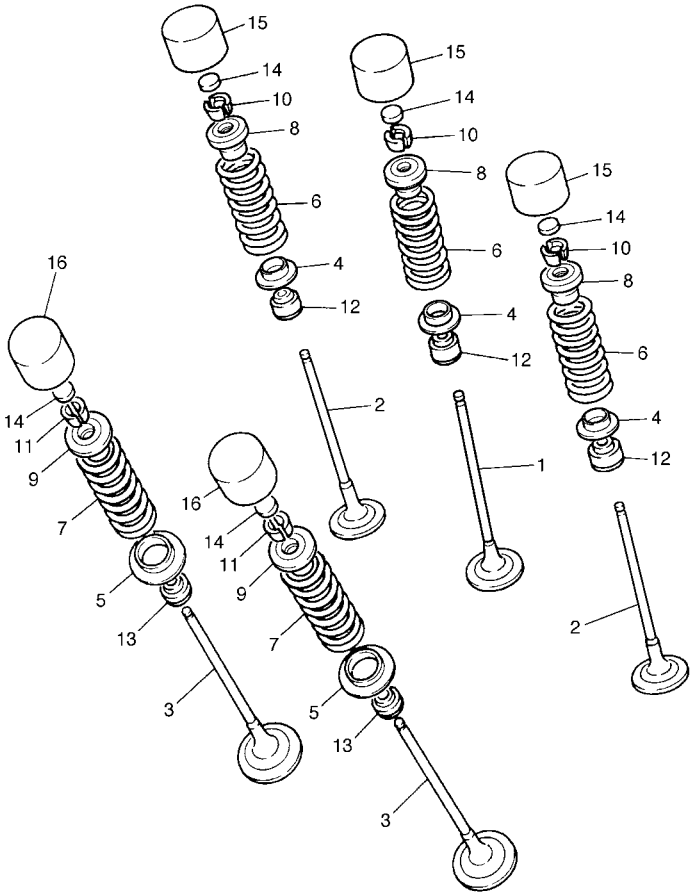

5VY1300-C040

FIG. 4 VALVULA

REF. Nº	CODIGO Nº	DESCRIPCION	5VY7					OBSERVACIONES
14	1HX–12169–11	COJIN, AJUSTADOR 2 (1.90)	20					UR
	1HX–12169–31	COJIN, AJUSTADOR 2 (1.95)	20					UR
	1HX–12169–50	COJIN, AJUSTADOR 2 (2.00)	20					UR
	1HX–12169–70	COJIN, AJUSTADOR 2 (2.05)	20					UR
	1HX–12169–90	COJIN, AJUSTADOR 2 (2.10)	20					UR
	1HX–12169–E0	COJIN, AJUSTADOR 2 (2.15)	20					UR
	1HX–12169–G0	COJIN, AJUSTADOR 2 (2.20)	20					UR
	1HX–12169–J0	COJIN, AJUSTADOR 2 (2.25)	20					UR
	1HX–12169–L0	COJIN, AJUSTADOR 2 (2.30)	20					UR
	1HX–12169–N0	COJIN, AJUSTADOR 2 (2.35)	20					UR
	1HX–12169–T0	COJIN, AJUSTADOR 2 (2.40)	20					UR
15	3LN–12153–20	LEVANTADOR DE VALVULA	12					UR AZUL
	3LN–12153–30	LEVANTADOR DE VALVULA	12					UR ROJO
	3LN–12153–09	LEVANTADOR DE VALVULA (O/S)	12					UR VERDE
16	3FV–12153–20	LEVANTADOR DE VALVULA	8					UR AZUL
	3FV–12153–30	LEVANTADOR DE VALVULA	8					UR ROJO
	3FV–12153–09	LEVANTADOR DE VALVULA (O/S)	8					UR VERDE

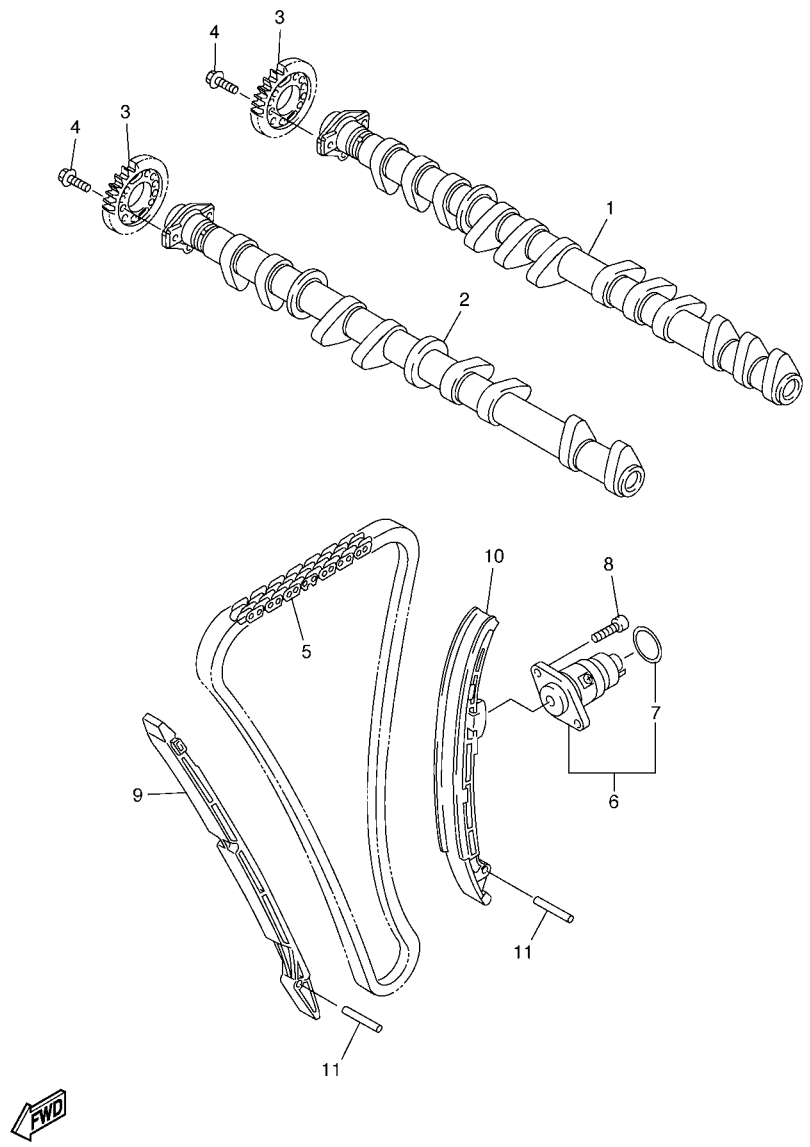

5VY1300-C050

FIG. 5 ARBOL DE LEVAS & CADENA

REF. Nº	CODIGO Nº	DESCRIPCION	5VY7					OBSERVACIONES
1	5VY–12170–00	ARBOL DE LEVAS COMPLETO 1	1					
2	5VY–12180–00	ARBOL DE LEVAS COMPLETO 2	1					
3	5VY–12176–00	CATALINA DE CADENA	2					
4	90105–07003	TORNILLO	4					
5	94591–60122	CADENA	1					
6	5VY–12210–00	TENSOR CADENA DE LEVA	1					
7	93210–26741	.ANILLO O	1					
8	91314–06020	PERNO	2					
9	5VY–12251–00	AMORTIGUADOR CADENA 1	1					
10	5VY–12252–00	AMORTIGUADOR CADENA 2	1					
11	93607–44190	PASADOR DE CLAVIJA	2					

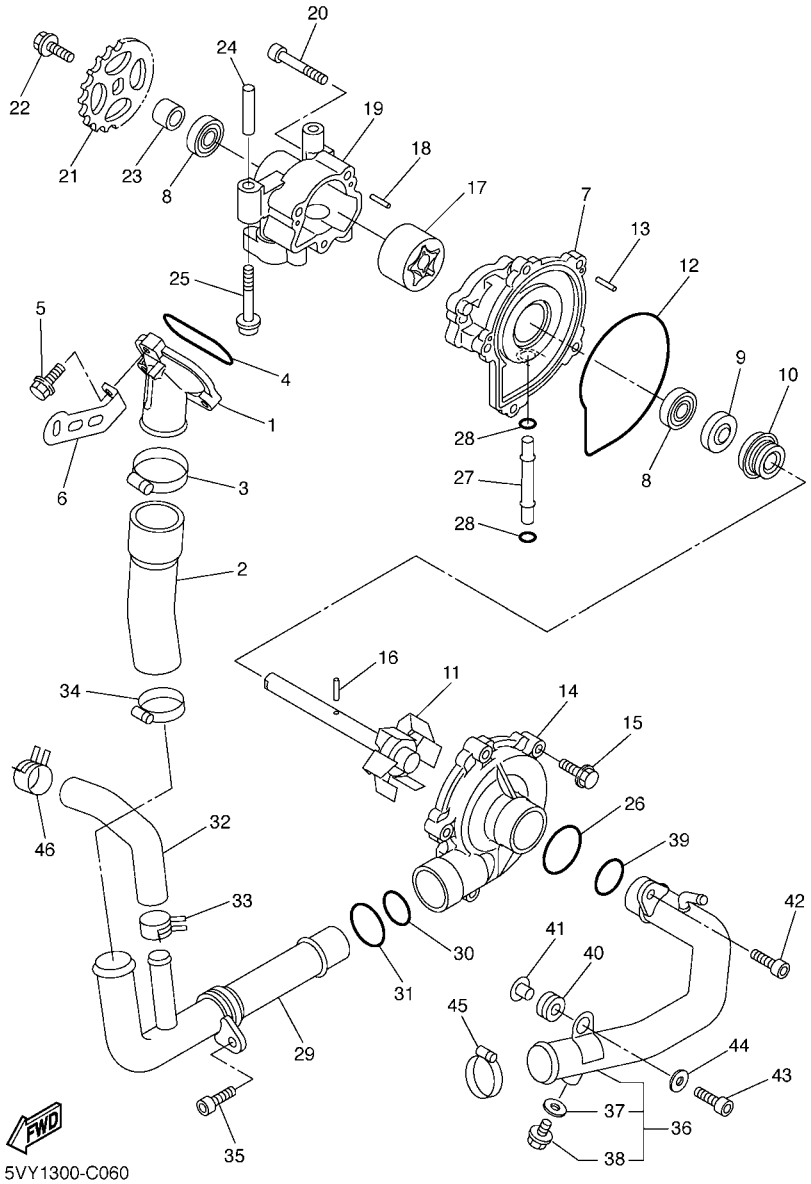

FIG. 6 BOMBA DE AGUA

REF. Nº	CODIGO Nº	DESCRIPCION	5VY7					OBSERVACIONES
1	5VY–12469–00	CONDUCTO	1					
2	5VY–12576–00	MANGUERA 1	1					
3	90450–38040	BRIDA, MANGUERA	1					
4	93210–47675	ANILLO O	1					
5	95024–06025	PERNO, DE BRIDA	3					
6	5VY–12637–00	SOPORTE 1	1					
7	5VY–12421–00	CAJA DE BOMBA DE AGUA	1					
8	93306–00106	COJINETE	2					
9	93102–12372	SELLO ACEITE	1					
10	11H–12438–10	SELLO MECANICO	1					
11	5VY–12450–00	EJE IMPULSOR COMPLETO	1					
12	4XV–12439–00	ANILLO O	1					
13	93603–12007	PASADOR DE CLAVIJA	2					
14	5VY–12422–00	CUBIERTA DE CAJA	1					
15	90105–066A5	TORNILLO	5					
16	93603–17070	PASADOR DE CLAVIJA	1					
17	5VY–13310–00	ROTOR COMPLETO 1	1					
18	93603–12007	PASADOR DE CLAVIJA	2					
19	5VY–13336–00	CAJA DE ROTOR	1					
20	91317–06040	PERNO	3					
21	5VY–13355–00	CATALINA IMPULSADA	1					
22	90105–06154	TORNILLO	1					
23	5VY–12456–00	ARANDELA	1					
24	91808–30031	PASADOR DE CLAVIJA	1					
25	90110–06026	TORNILLO ALLEN	2					
26	93210–357A2	ANILLO O	1					
27	4XV–12485–00	TUBO 5	1					

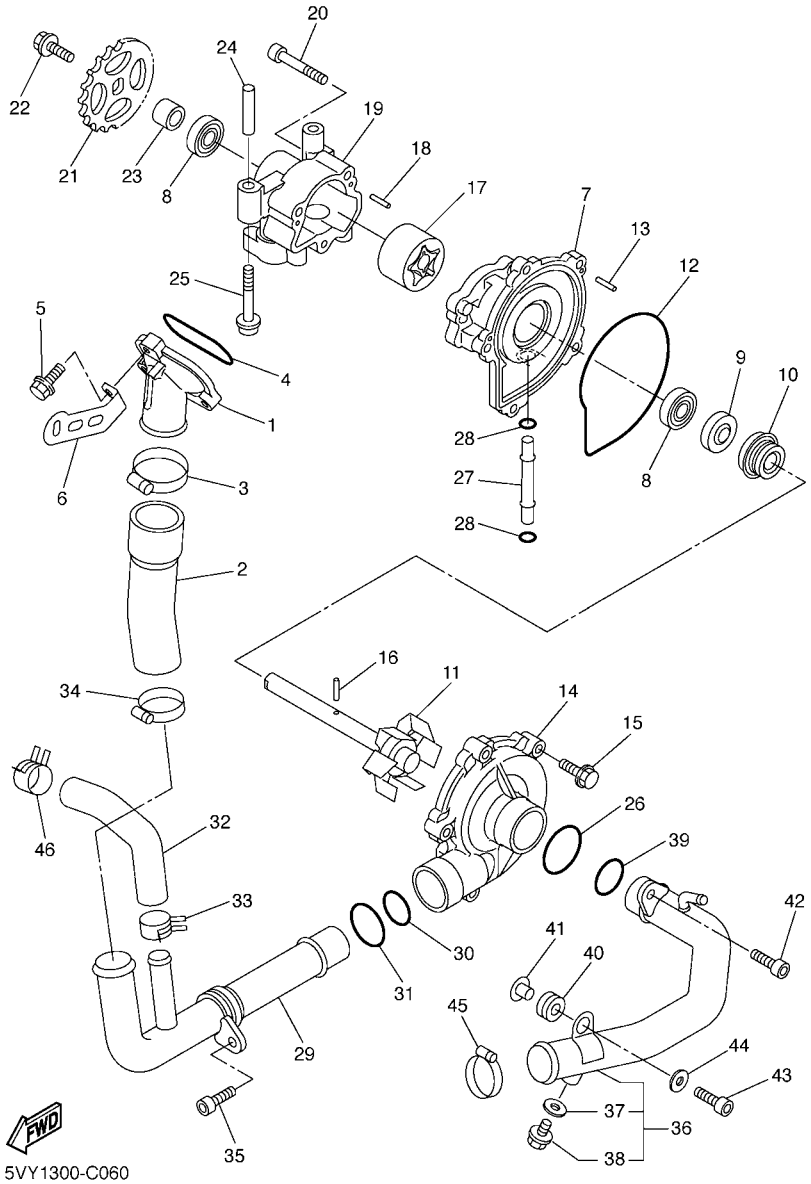

FIG. 6 BOMBA DE AGUA

REF. Nº	CODIGO Nº	DESCRIPCION	5VY7					OBSERVACIONES
28	93210–06667	ANILLO O	2					
29	5VY–12481–00	TUBO 1	1					
30	93210–235A1	ANILLO O	1					
31	93210–27370	ANILLO O	1					
32	5VY–12588–00	MANGUERA 5	1					
33	90467–200A0	PRESILLA	1					
34	90450–32001	BRIDA, MANGUERA	1					
35	90110–06041	TORNILLO ALLEN	1					
36	5VY–12484–00	TUBO 4	1					
37	90430–06014	.JUNTA	1					
38	90153–06029	.TORNILLO HEXAGONAL	1					
39	93210–235A1	ANILLO O	1					
40	90480–12010	TAPON	1					
41	90387–06087	COLLAR	1					
42	90110–06041	TORNILLO ALLEN	1					
43	90110–06019	TORNILLO ALLEN	1					
44	90201–06055	ARANDELA PLANA	1					
45	90450–32001	BRIDA, MANGUERA	1					
46	90467–200A0	PRESILLA	1					

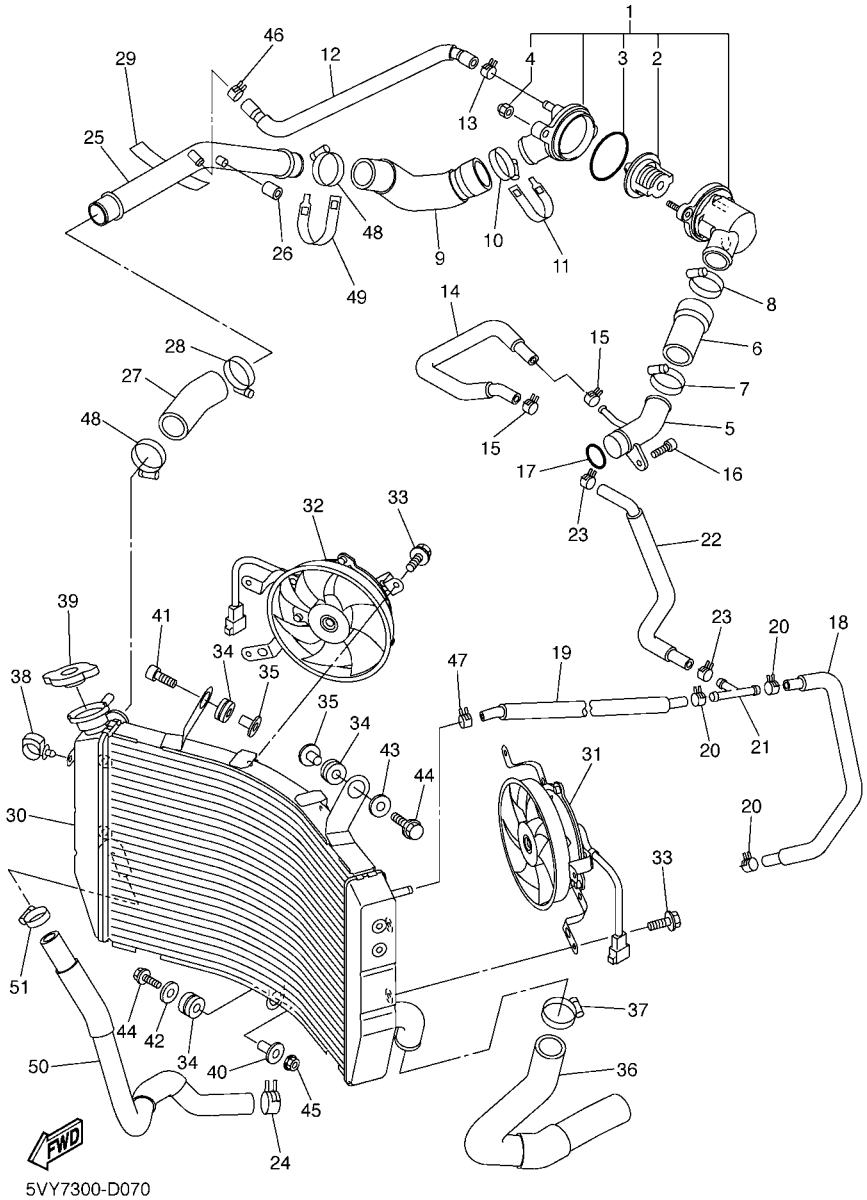

FIG. 7 RADIADOR & MANGUERA

REF. Nº	CODIGO Nº	DESCRIPCION	5VY7					OBSERVACIONES
1	5VY–12410–00	TERMOSTATO CONJUNTO	1					
2	5LP–12411–00	.TERMOSTAT	1					
3	93210–49046	.ANILLO O	1					
4	90176–06065	.TUERCA CORONA	2					
5	5VY–12485–00	TUBO 5	1					
6	5VY–12579–00	MANGUERA 4	1					
7	90450–35001	BRIDA, MANGUERA	1					
8	90450–38040	BRIDA, MANGUERA	1					
9	5VY–12577–00	MANGUERA 2	1					
10	90450–38040	BRIDA, MANGUERA	1					
11	5GV–1246A–00	CUBIERTA 1	1					
12	5VY–12552–00	MANGUERA 8	1					
13	90467–11044	PRESILLA	1					
14	5VY–1243F–00	MANGUERA 3	1					
15	90467–11090	PRESILLA	2					
16	90110–06004	TORNILLO ALLEN	1					
17	93210–235A1	ANILLO O	1					
18	5VY–1243A–00	TUBO 1	1					
19	5VY–1244G–00	MANGUERA4	1					
20	90467–11090	PRESILLA	3					
21	90413–07023	UNION	1					
22	5VY–1243E–00	TUBO 2	1					
23	90467–11090	PRESILLA	2					
24	90467–200A0	PRESILLA	1					
25	5VY–12483–01	TUBO 3	1					
26	90445–11418	TUBO (L18)	1					
27	5VY–12578–00	MANGUERA 3	1					

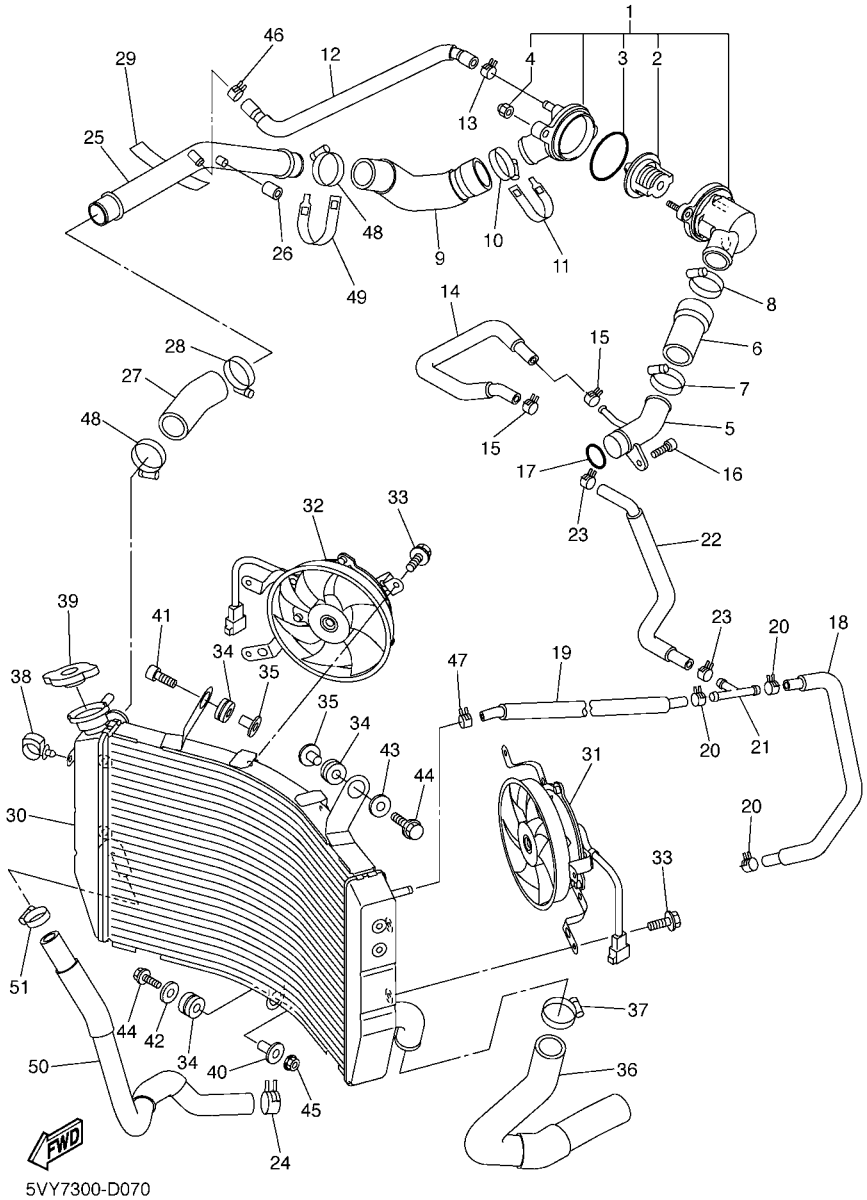

FIG. 7 RADIADOR & MANGUERA

REF. Nº	CODIGO Nº	DESCRIPCION	5VY7					OBSERVACIONES
28	90450–35001	BRIDA, MANGUERA	1					
29	5VY–12494–00	SELLO DE TUBO 1	1					
30	5VY–12461–00	RADIADOR COMPLETO	1					
31	5VY–12405–00	COMPRESOR	1					
32	5VY–12405–10	COMPRESOR	1					
33	5GJ–12675–00	PERNO, SUJECION VENTILADOR	6					
34	90480–15363	TAPON	3					
35	90387–0614M	COLLAR	2					
36	5VY–12551–00	55 PLACA	1					
37	90450–35001	BRIDA, MANGUERA	1					
38	90464–13249	BRIDA	1					
39	5SL–12462–00	TAPON, DEL RADIADOR	1					
40	90387–0614M	COLLAR	1					
41	91317–06030	PERNO	1					
42	90201–06071	ARANDELA PLANA	1					
43	90201–06074	ARANDELA PLANA	1					
44	95827–06030	TUERCA DE REBORDE	2					
45	95607–06200	TUERCA DE AUTO-CIERRE	1					
46	90467–12191	PRESILLA	1					
47	90467–11090	PRESILLA	1					
48	90450–35001	BRIDA, MANGUERA	2					
49	5GV–1246E–00	CUBIERTA 2	1					
50	5VY–12589–01	MANGUERA 6	1					
51	90450–22017	BRIDA, MANGUERA	1					

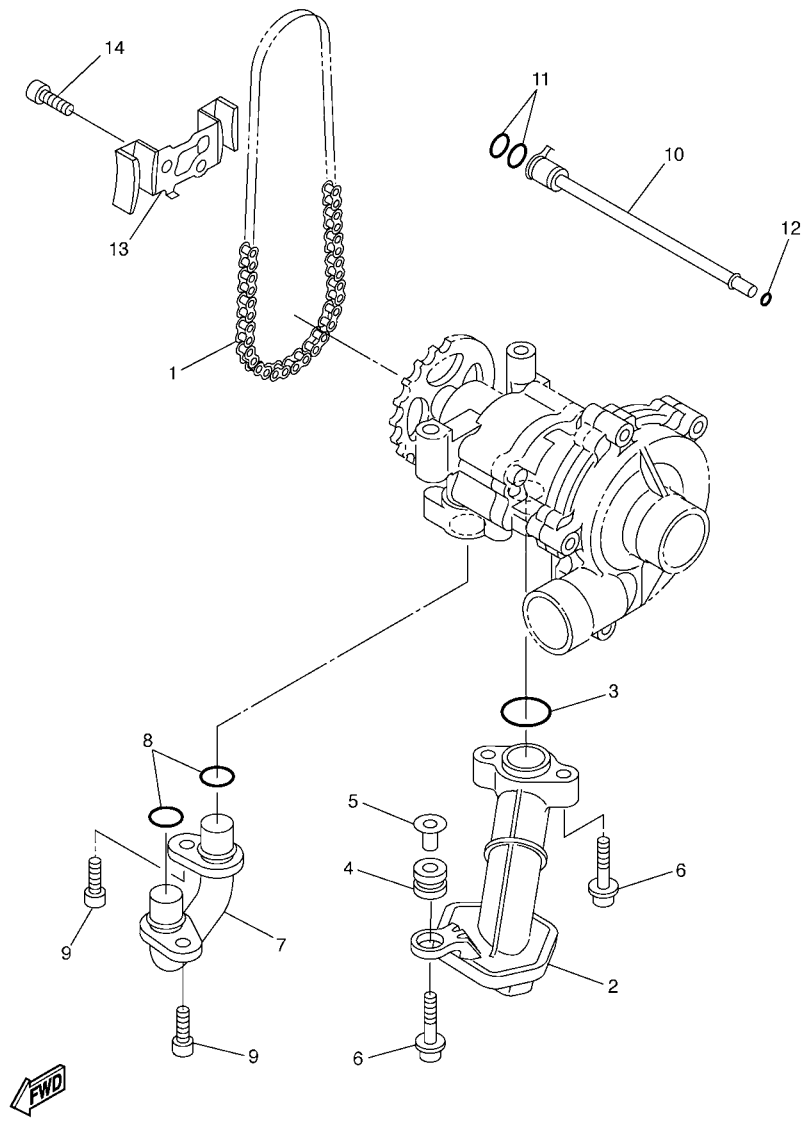

5VY1300-C080

FIG. 8 BOMBA DE ACEITE

REF. Nº	CODIGO Nº	DESCRIPCION	5VY7					OBSERVACIONES
1	94580–25078	CADENA (DID25 78LE)	1					
2	5VY–13410–00	CAJA DE FILTRO COMPLETA	1					
3	93210–22298	ANILLO O	1					
4	90480–13010	TAPON	1					
5	5VY–13117–00	COLLAR, DISTANCIA	1					
6	90110–06060	TORNILLO ALLEN	3					
7	5VY–13416–00	TUBO DE ACEITE 1	1					
8	93210–14003	ANILLO O	2					
9	90110–06041	TORNILLO ALLEN	2					
10	5VY–1316E–00	TUBO, DE ENTREGA 5	1					
11	93210–09165	ANILLO O	2					
12	93210–06667	ANILLO O	1					
13	5VY–13898–00	SOSTEN	1					
14	90110–06018	TORNILLO ALLEN	2					

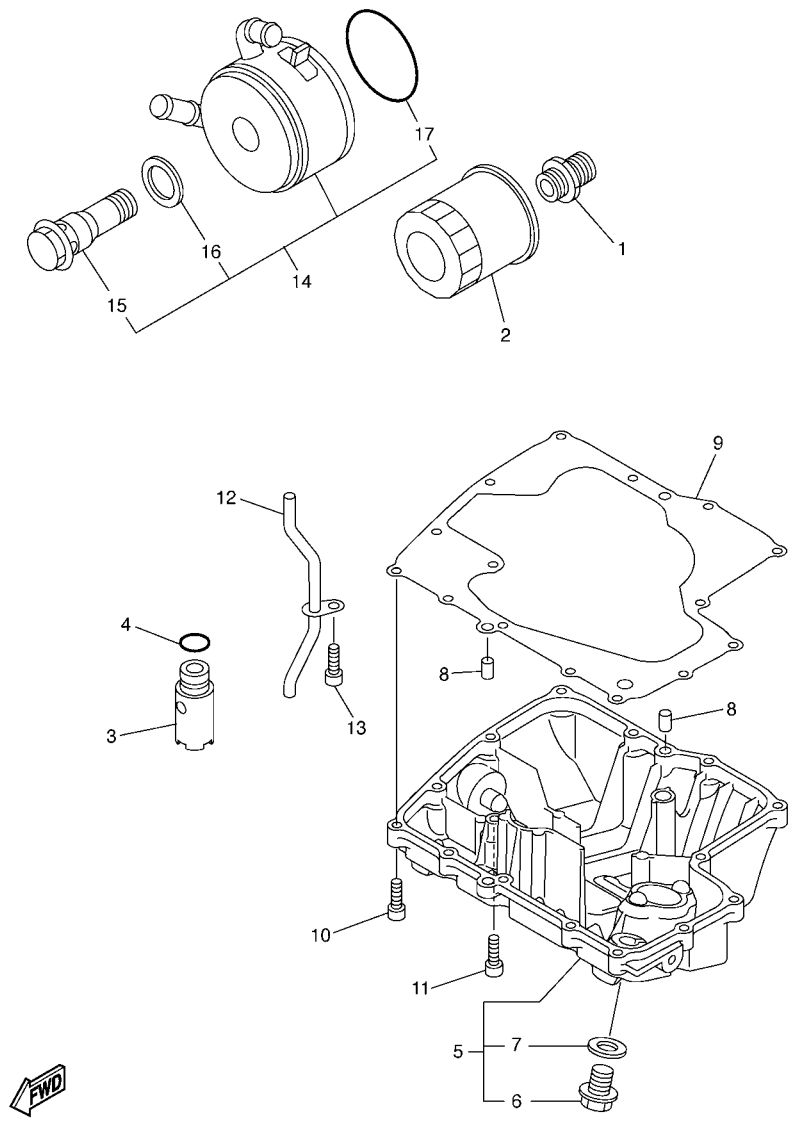

5VY1300-C090

FIG. 9 FILTRO ACEITE

REF. Nº	CODIGO Nº	DESCRIPCION	5VY7					OBSERVACIONES
1	90401–20145	PERNO DE UNION	1					
2	5GH–13440–00	ELEMENTO FILTRO DE ACEITE	1					
3	5VY–13490–00	VALVELA DE DESCOMPRESION	1					
4	93210–15566	ANILLO O	1					
5	5VY–13417–00	TAPA DE FILTRO	1					
6	90340–14132	.TORNILLO, DE DRENAJE	1					
7	214–11198–01	.EMPAQUE	1					
8	99530–08012	PASADOR, DE ESPIGA	2					
9	5VY–13414–01	EMPAQUE DE TAPA FILTRO	1					
10	91317–06025	PERNO	14					
11	90110–06020	TORNILLO ALLEN	1					
12	5VY–13161–00	TUBO CONDUCTOR 1	1					
13	90110–06018	TORNILLO ALLEN	1					
14	5VY–13470–00	ENFRIADOR DE ACEITE COMPLETO	1					
15	5EB–12822–00	.PERNO DE UNION	1					
16	5EB–13475–00	.EMPAQUE	1					
17	5JW–13473–00	.ANILLO O	1					

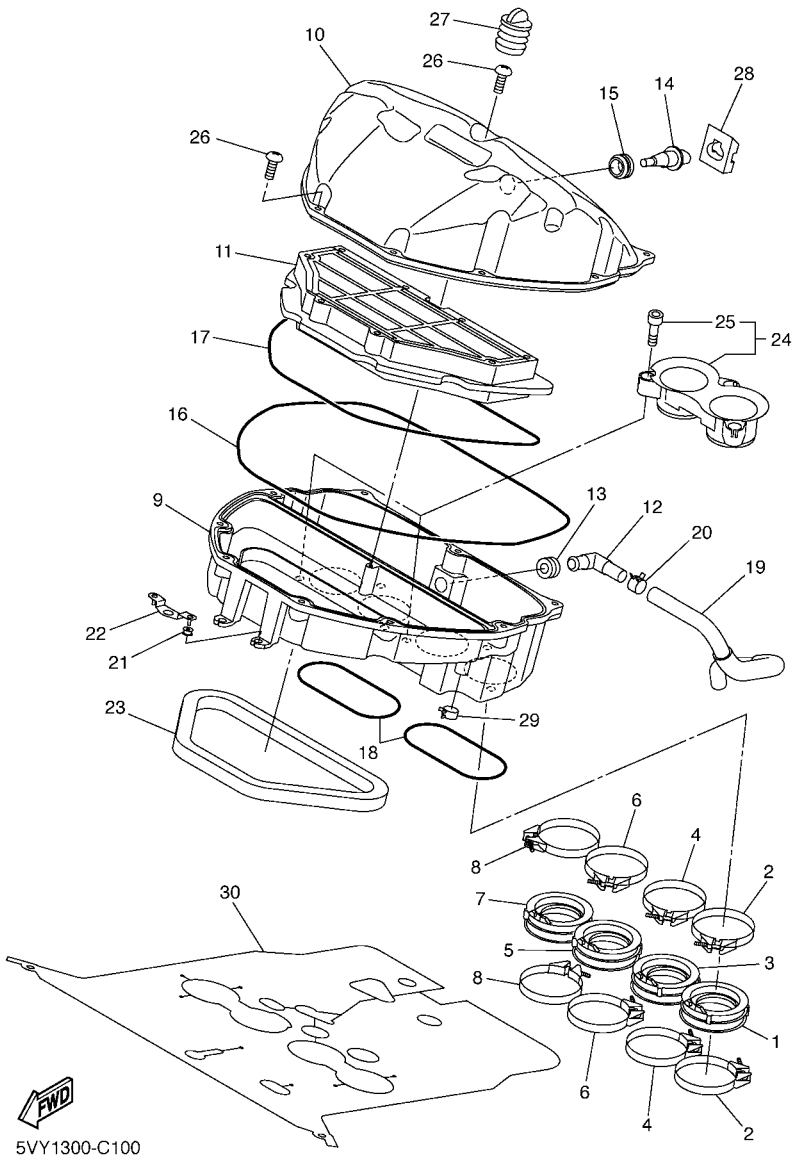

FIG. 10 ADMISION

REF. Nº	CODIGO Nº	DESCRIPCION	5VY7					OBSERVACIONES
1	5VY–13595–00	TOBERA	1					
2	90450–62001	BRIDA, MANGUERA	2					
3	5VY–13596–00	TOBERA DE CARBURADOR 2	1					
4	90450–62001	BRIDA, MANGUERA	2					
5	5VY–13597–00	JUNTA, DE CARBURADOR 3	1					
6	90450–62001	BRIDA, MANGUERA	2					
7	5VY–13598–00	COJINETE DE RODILLOS	1					
8	90450–62001	BRIDA, MANGUERA	2					
9	5VY–14411–00	CAJA FILTRO DEL AIRE 1	1					
10	5VY–14421–00	CAJA FILTRO DEL AIRE 2	1					
11	5VY–14451–00	ELEMENTO DEL FILTRO DEL AIRE	1					
12	5VY–14419–00	TUBO	1					
13	31A–14435–00	ANILLO PROTECTOR	1					
14	5CA–85886–00	SENSOR	1					
15	5VY–14435–00	ANILLO PROTECTOR	1					
16	5VY–14452–00	SELLO	1					
17	5VY–14462–00	SELLO	1					
18	5VY–14457–00	SELLO	2					
19	5VY–15393–00	TUBO, RESPIRADERO2	1					
20	90467–160A1	PRESILLA	1					
21	90480–08264	TAPON	2					
22	5VY–14498–00	SOPORTE 1	1					
23	5VY–14467–00	SELLO	1					
24	5VY–1440B–00	UNION COMPLETO	2					
25	90109–05005	.PERNO	3					
26	90154–05004	TORNILLO DE LIGAR	10					
27	5VY–14862–00	TAPON	1					

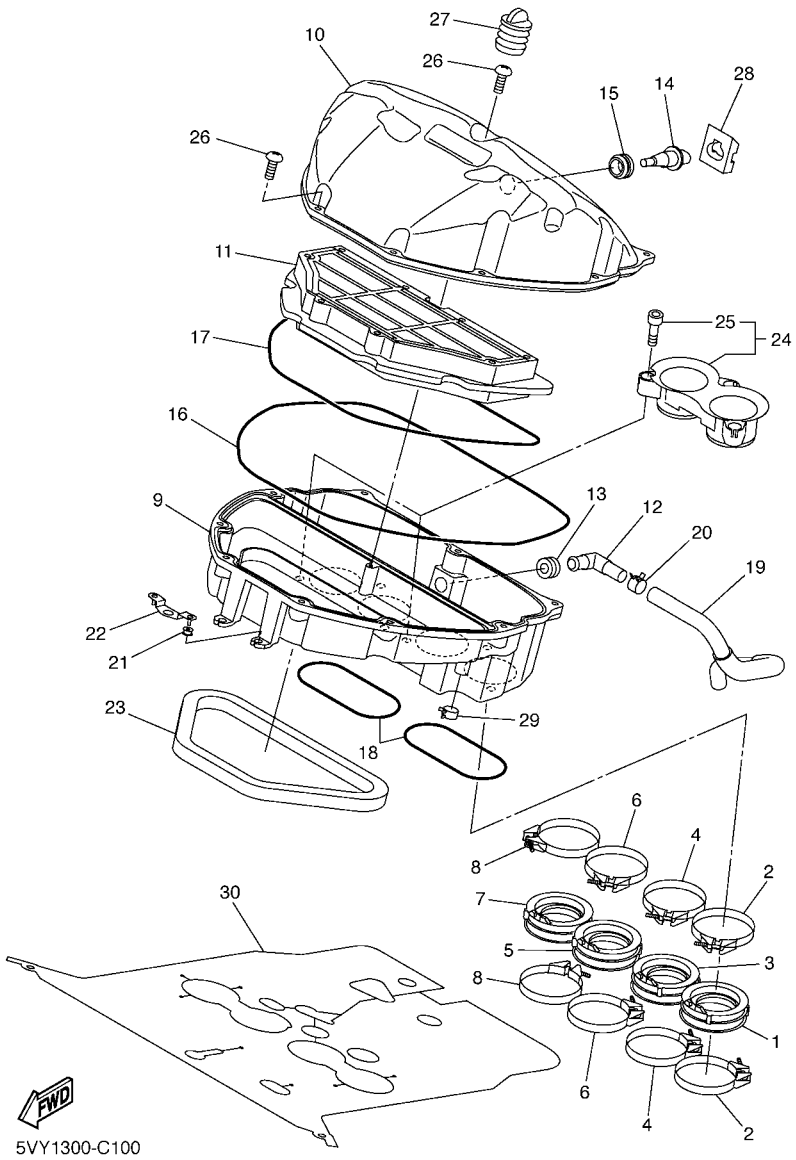

FIG. 10 ADMISION

REF. Nº	CODIGO Nº	DESCRIPCION	5VY7					OBSERVACIONES
28	5VY–14425–00	AMORTIGUADOR 1	1					
29	90467–14015	PRESILLA	1					
30	5VY–12682–00	PROTECTOR	1					

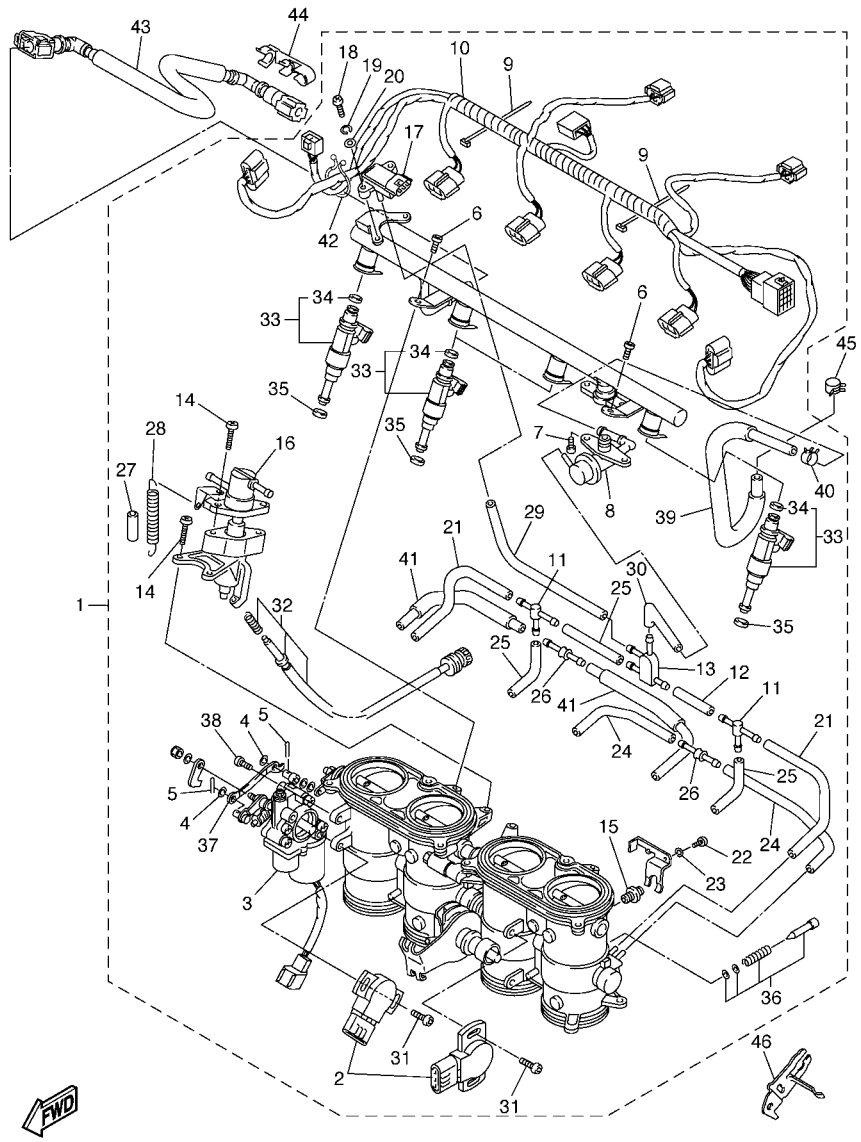

5VY1300-C110

FIG. 11 ADMISION 2

REF. Nº	CODIGO Nº	DESCRIPCION	5VY7					OBSERVACIONES
1	5VY–13750–00	CAJA DE ACELERADOR COMPL.	1					
2	5FL–85885–01	.TERMICA SENSORIO	2					
3	5VY–85850–00	.MOTOR ENGRANADO	1					
4	22U–14952–00	.ARANDELA	2					
5	91492–12010	.PASADOR DE CHAVETA	2					
6	98507–06012	.TORNILLO DE CABEZA PLANA	2					
7	98507–05008	.TORNILLO DE CABEZA CON PLANA	2					
8	5VY–13906–00	.REGULADOR	1					
9	4KM–14137–00	.PRESILLA	5					
10	5VY–82386–00	.EXTENSION, ARNES DE CABLES	1					
11	68V–24376–00	.TUBO DE UNION 1	2					
12	5JW–14396–00	.TUBO	1					
13	5PW–1410F–00	.CONECTOR	1					
14	98507–05014	.TORNILLO DE CABEZA PLANA	4					
15	5VY–14171–00	.EMBOLO DE ARRANQUE	2					
16	5VY–14204–00	.CAJA, DE ARRANQUE	1					
17	5VX–82380–00	.SENSOR DE PRESION	1					
18	98507–05016	.TORNILLO DE CABEZA PLANA	2					
19	92907–05100	.ARANDELA	2					
20	92907–05600	.ARANDELA	2					
21	5FL–14349–10	.TUBO	2					
22	98507–03016	.TORNILLO DE CABEZA PLANA	4					
23	92990–03100	.ARANDELA PLANA	4					
24	5PW–14349–00	.TUBO	2					
25	5PS–14987–00	.TUBO	3					
26	5PW–14251–00	.NIPLE	2					
27	5DM–14936–00	.ASIENTO DE RESORTE	1					

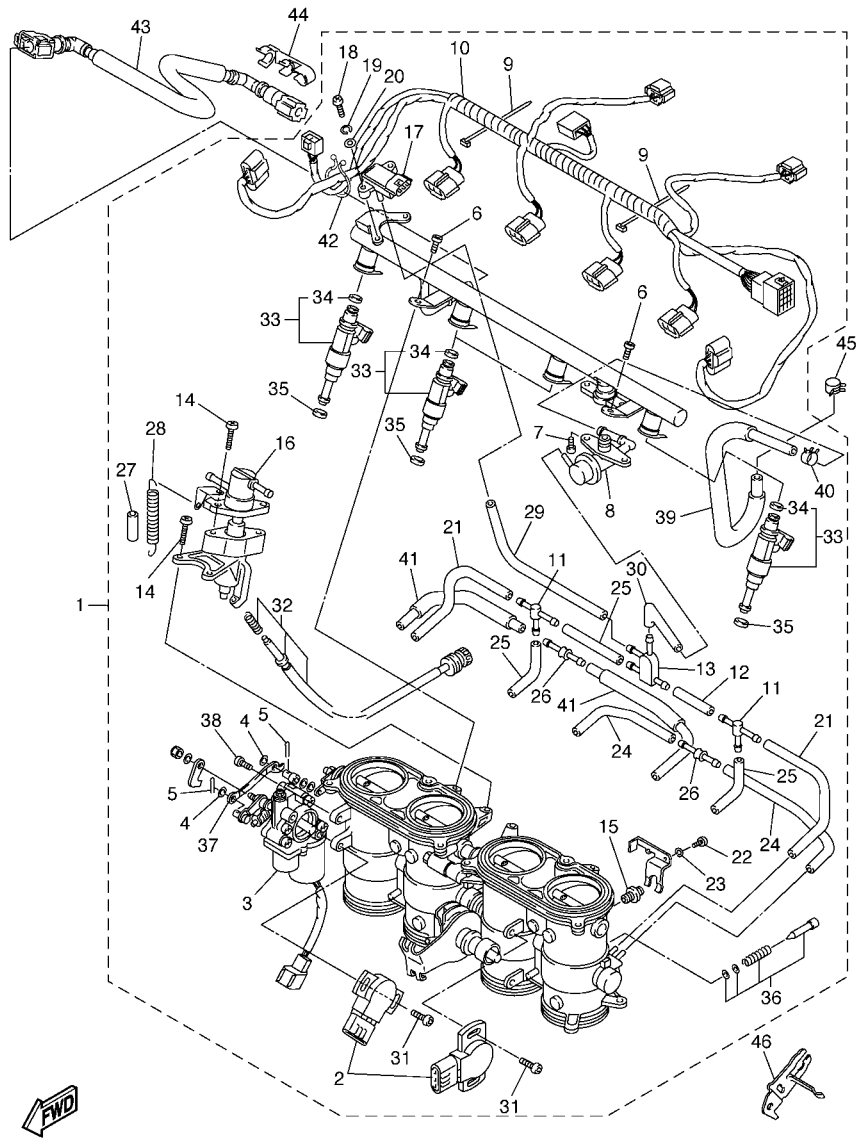

5VY1300-C110

FIG. 11 ADMISION 2

REF. Nº	CODIGO Nº	DESCRIPCION	5VY7					OBSERVACIONES
28	5JW–14589–00	.RESORTE	1					
29	5SL–14349–00	.TUBO	1					
30	5VY–14348–00	.MANGUERA	1					
31	8CC–14216–10	.TORNILLO	4					
32	5PW–14103–00	.CJTO. TORNILLO DEL RALENTI	1					
33	5VY–13761–00	.INYECTOR	4					
34	5PS–14147–00	..ANILLO O	1					
35	90430–09002	.JUNTA	4					
36	5JW–14104–00	.CJTO. TORNNILLO DE AIRE	2					
37	5VY–14905–00	.PALANCA DE ARRANQUE	1					
38	98507–06020	.TORNILLO DE CABEZA CON PLANA	2					
39	5VY–13972–00	.TUBO, COMBUSTIBLE 2	1					
40	90467–120A1	.PRESILLA	1					
41	5VY–13543–00	.TUBO DE AIRE	2					
42	90464–30040	.BRIDA	1					
43	5VY–13971–00	ANILLO DE ESPACIADOR	1					
44	90464–16005	BRIDA	1					
45	90467–12003	PRESILLA	1					
46	5VY–14413–00	SOPORTE	1					

FIG. 12 SYSTEMA DE INDUCCION DE AIRE

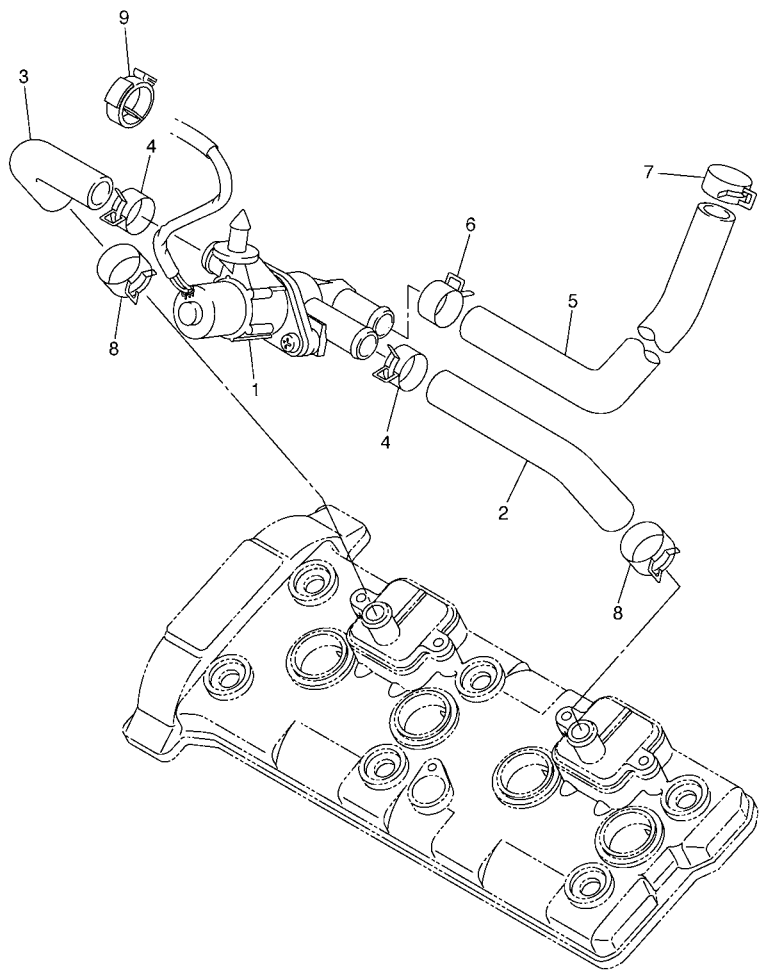

5VY1300-C120

REF. Nº	CODIGO Nº	DESCRIPCION	5VY7					OBSERVACIONES
1	5VY–14840–00	VALVULA, CORTE DE AIRE	1					
2	5VY–14881–00	TUBO 1	1					
3	5VY–14882–00	TUBO 2	1					
4	90467–18172	PRESILLA	2					
5	5VY–14883–00	TUBO 3	1					
6	90467–18172	PRESILLA	1					
7	90467–17128	PRESILLA	1					
8	90467–180A0	PRESILLA	2					
9	90464–30003	BRIDA	1					

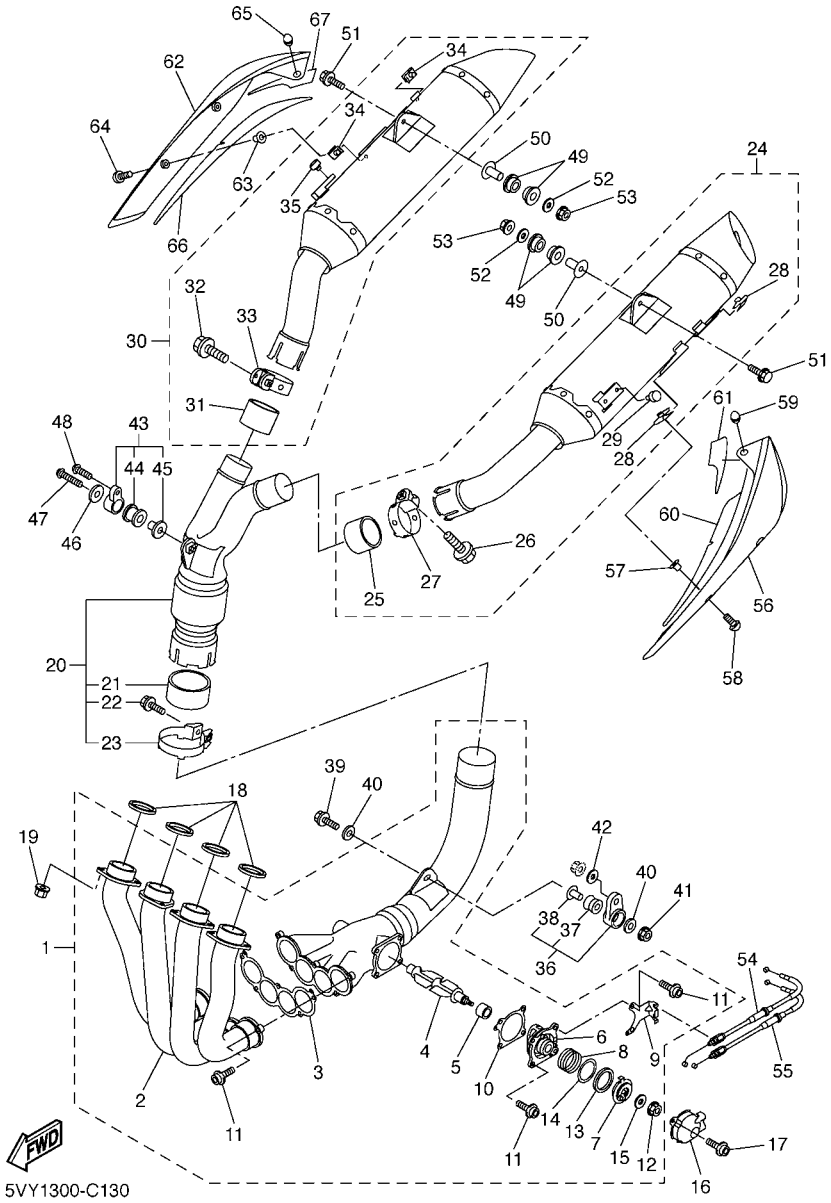

FIG. 13 DESCARGA

REF. Nº	CODIGO Nº	DESCRIPCION	5VY7					OBSERVACIONES
1	5VY–14610–00	TUBO DE ESCAPE COMPLETO 1	1					
2	5VY–14602–00	.TUBO DE ESPAPE COMPLETO	1					
3	5VY–14623–00	.EMPAQUE	1					
4	5VY–14821–00	.BRAZO DE EJE 1	1					
5	5VY–14638–00	.COLLAR	1					
6	5VY–14811–00	.CAJA	1					
7	5VY–14865–00	.POLEA 1	1					
8	5VY–14856–00	.RESORTE	1					
9	5VY–14867–00	.SOPORTE	1					
10	5VY–14643–00	.JUNTA BRIDA DE ESCAPE	1					
11	90110–06110	.TORNILLO ALLEN	7					
12	90179–06M28	.TUERCA	1					
13	5VY–14648–00	.COLLAR 2	1					
14	5VY–14674–00	.VALVULA	1					
15	92990–06200	.ARANDELA PLANA	1					
16	5VY–14826–00	PROTECTOR DE VALVULA DE ESCAPE	1					
17	90110–06110	TORNILLO ALLEN	2					
18	4FM–14613–00	JUNTA, TUBO DE ESCAPE	4					
19	90179–08410	TUERCA	8					
20	5VY–14740–00	ASAMBLEA DEL CATALIZADOR	1					
21	5VY–14755–00	.EMPAQUE DE SILENCIADOR	1					
22	95814–08030	.TUERCA DE REBORDE	1					
23	5JJ–14715–00	.BANDA DE SILENCIADOR	1					
24	5VY–14710–00	TUBO DE ESCAPE COMPLETO 1	1					
25	5VY–14714–00	.EMPAQUE DE SILENCIADOR	1					
26	90105–08063	.TORNILLO	1					
27	5VY–14715–00	.BANDA DE SILENCIADOR	1					

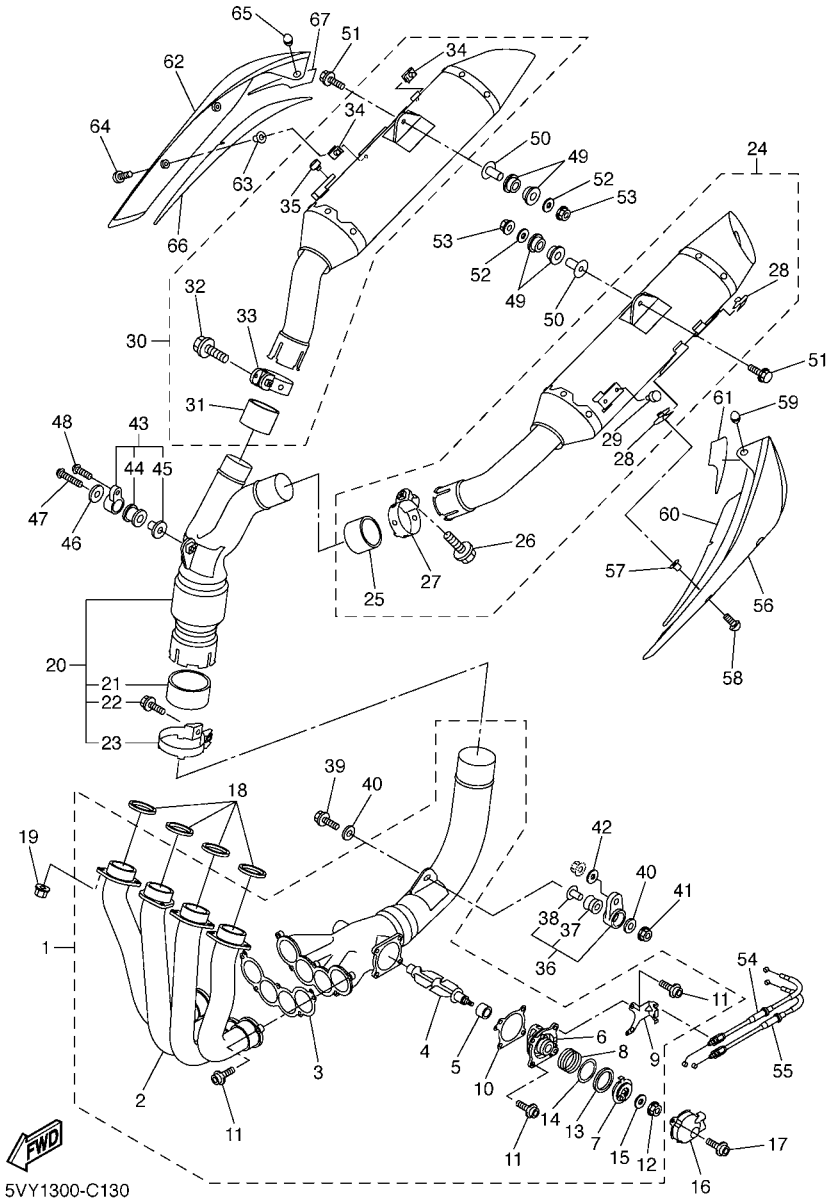

FIG. 13 DESCARGA

REF. Nº	CODIGO Nº	DESCRIPCION	5VY7					OBSERVACIONES
28	90183–060A2	.TUERCA DE RESORTE	2					
29	90338–06007	.TAPON	1					
30	5VY–14720–00	TUBO DE ESCAPE COMPLETO 2	1					
31	5VY–14714–00	.EMPAQUE DE SILENCIADOR	1					
32	90105–08063	.TORNILLO	1					
33	5VY–14715–00	.BANDA DE SILENCIADOR	1					
34	90183–060A2	.TUERCA DE RESORTE	2					
35	90338–06007	.TAPON	1					
36	5VY–21890–00	SOPORTE	1					
37	5VY–14747–00	.AMORTIGUADOR DE SILENCIADOR	1					
38	90387–08021	.COLLAR	1					
39	95817–08040	TUERCA DE REBORDE	1					
40	90201–087G2	ARANDELA PLANA	2					
41	95604–08200	TUERCA DE AUTO-CIERRE	1					
42	90201–10054	ARANDELA PLANA	1					
43	5VY–21880–00	SOPORTE	1					
44	4XV–27424–00	.AMORTIGUADOR DE SILENCIADOR	1					
45	90387–08005	.COLLAR	1					
46	90201–08034	ARANDELA PLANA	1					
47	92014–08040	PERNO	1					
48	90111–08016	TORNILLO	1					
49	5VY–27424–00	AMORTIGUADOR DE APOYAPIE 2	4					
50	90387–08020	COLLAR	2					
51	95814–08045	TUERCA DE REBORDE	2					
52	90201–08034	ARANDELA PLANA	2					
53	95604–08200	TUERCA DE AUTO-CIERRE	2					
54	5VY–1133E–00	CABLE DE POLEA	1					

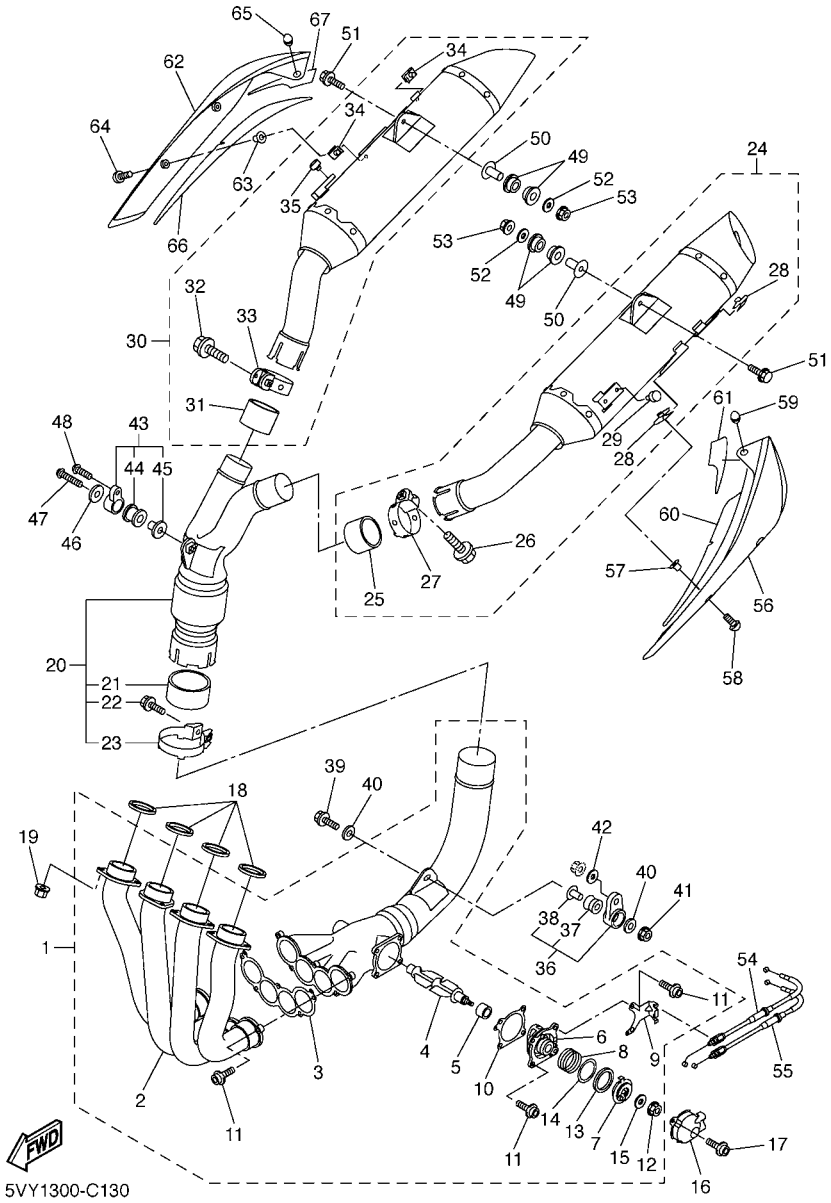

FIG. 13 DESCARGA

REF. Nº	CODIGO Nº	DESCRIPCION	5VY7					OBSERVACIONES
55	5VY–1133F–00	CABLE DE POLEA	1					
56	5VY–14718–01–P0	PROTECTOR DE SILENCIADOR 1	1					MT2
57	90387–062L2	COLLAR	2					
58	90111–06038	TORNILLO	2					
59	5VY–14757–00	AMORTIGUADOR SILENCIADOR 2	1					
60	5VY–1475P–00	ASIENTO	1					
61	5VY–1477P–00	ASIENTO	1					
62	5VY–14728–01–P0	PROTECTOR DE SILENCIADOR	1					MT2
63	90387–062L2	COLLAR	2					
64	90111–06038	TORNILLO	2					
65	5VY–14757–00	AMORTIGUADOR SILENCIADOR 2	1					
66	5VY–1476P–00	ASIENTO	1					
67	5VY–1478P–00	ASIENTO	1					

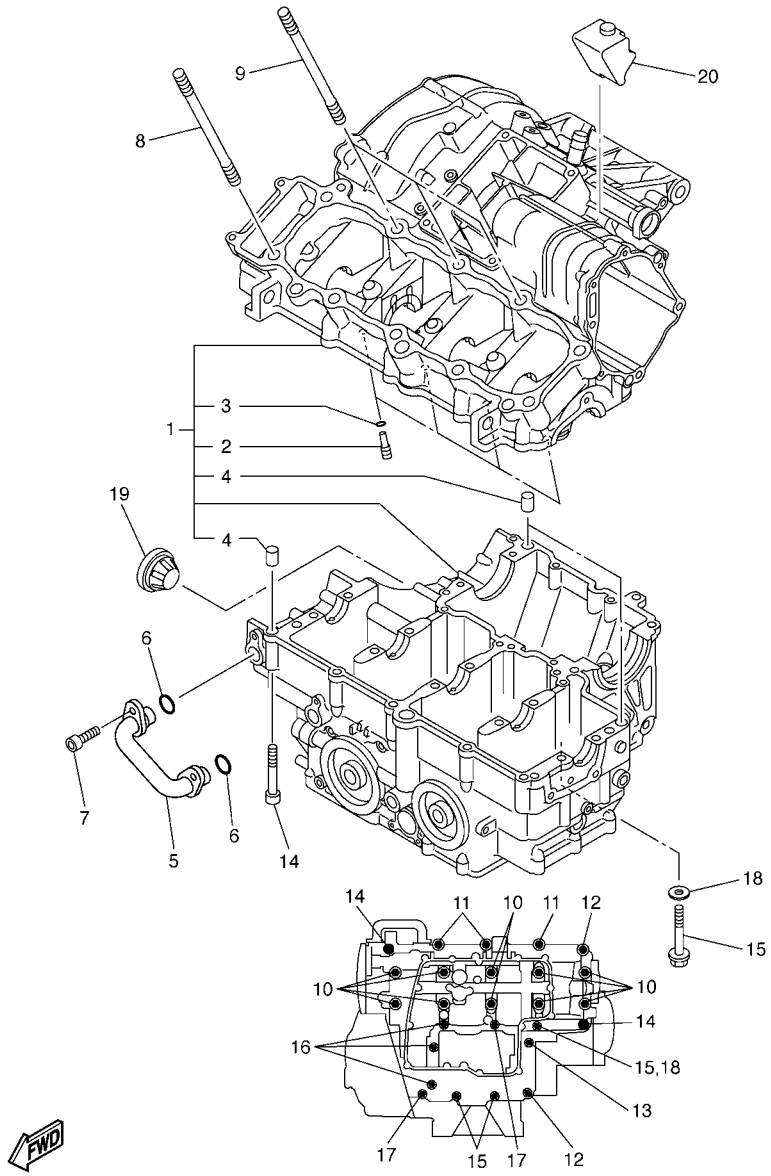

5VY1300-C140

FIG. 14 CARTER

REF. Nº	CODIGO Nº	DESCRIPCION	5VY7					OBSERVACIONES
1	5VY–15100–00	CARTER COMPLETO	1					
2	5EB–15155–00	.BOQUILLA 3	4					
3	93210–04092	.ANILLO O	4					
4	99530–10014	.PASADOR, DE ESPIGA	3					
5	5VY–13418–00	TUBO DE ACEITE 2	1					
6	93210–14003	ANILLO O	2					
7	90110–06041	TORNILLO ALLEN	2					
8	90116–10020	ESPARRAGO	7					
9	90116–10023	ESPARRAGO	3					
10	90119–09003	TORNILLO CON ARANDELA	10					
11	95817–08050	TUERCA DE REBORDE	3					
12	95817–08060	TUERCA DE REBORDE	2					
13	90105–08015	TORNILLO	1					
14	90109–06063	PERNO	2					
15	95817–06060	TUERCA DE REBORDE	3					
16	95817–06070	TUERCA DE REBORDE	3					
17	95817–06050	TUERCA DE REBORDE	2					
18	90430–06166	JUNTA	1					
19	5PW–15361–00	MEDIDOR DE NIVEL	1					
20	5VY–15316–00	AMORT. MONTANTE MOTOR 1	1					

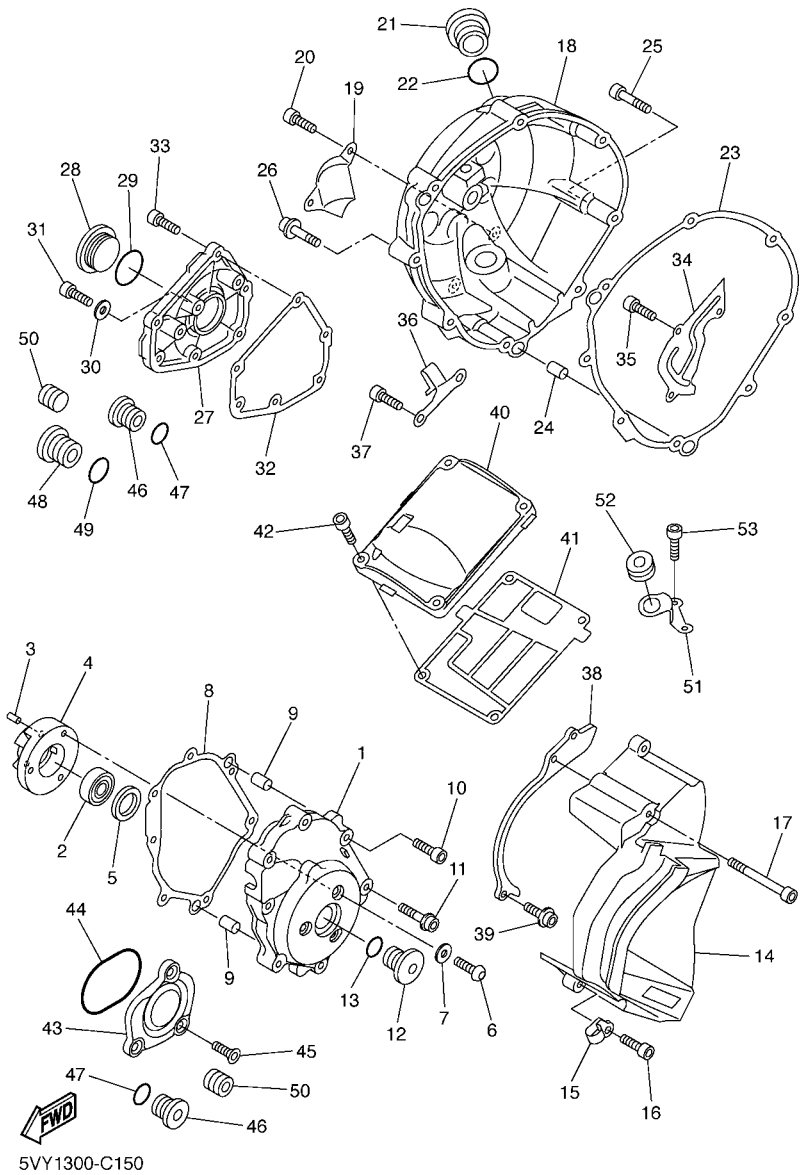

FIG. 15 CUBIERTA DE CARTER 1

REF. Nº	CODIGO Nº	DESCRIPCION	5VY7					OBSERVACIONES
1	5VY–15411–00	CUBIERTA DE CARTER 1	1					
2	93306–20124	COJINETE	1					
3	93605–10108	PASADOR DE CLAVIJA	2					
4	5VY–15164–00	CAJA DE COJINETE 2	1					
5	5VY–15542–00	COLLAR 2	1					
6	90149–06020	TORNILLO DE REGLAJE	3					
7	90201–06431	ARANDELA PLANA	3					
8	5VY–15451–00	EMPAQ DE CUBIERTA DE CARTER	1					
9	99480–10018	PASADOR	2					
10	90109–06031	PERNO	4					
11	90110–08068	TORNILLO ALLEN	3					
12	5PX–15189–00	TAPON	1					
13	93210–22382	ANILLO O	1					
14	5VY–15418–00	CUBIERTA CAJA DE CADENA	1					
15	90462–08225	BRIDA	1					
16	90110–06020	TORNILLO ALLEN	2					
17	90110–06047	TORNILLO ALLEN	1					
18	5VY–15421–00	TAPA DE CARTER DERECHA	1					
19	5VY–15499–00	PROTECTOR	1					
20	92014–06014	PERNO	2					
21	5VY–15362–00	TAPON DEL NIVEL DE ACEITE	1					
22	93210–27370	ANILLO O	1					
23	5VY–15461–00	JUNTA TAPA CARTER DRCHO	1					
24	93610–20189	PASADOR DE CLAVIJA	2					
25	90109–06016	PERNO	7					
26	90110–06112	TORNILLO ALLEN	1					
27	5VY–15416–00	CUBIERTA DE BOMBA DE ACEITE	1					

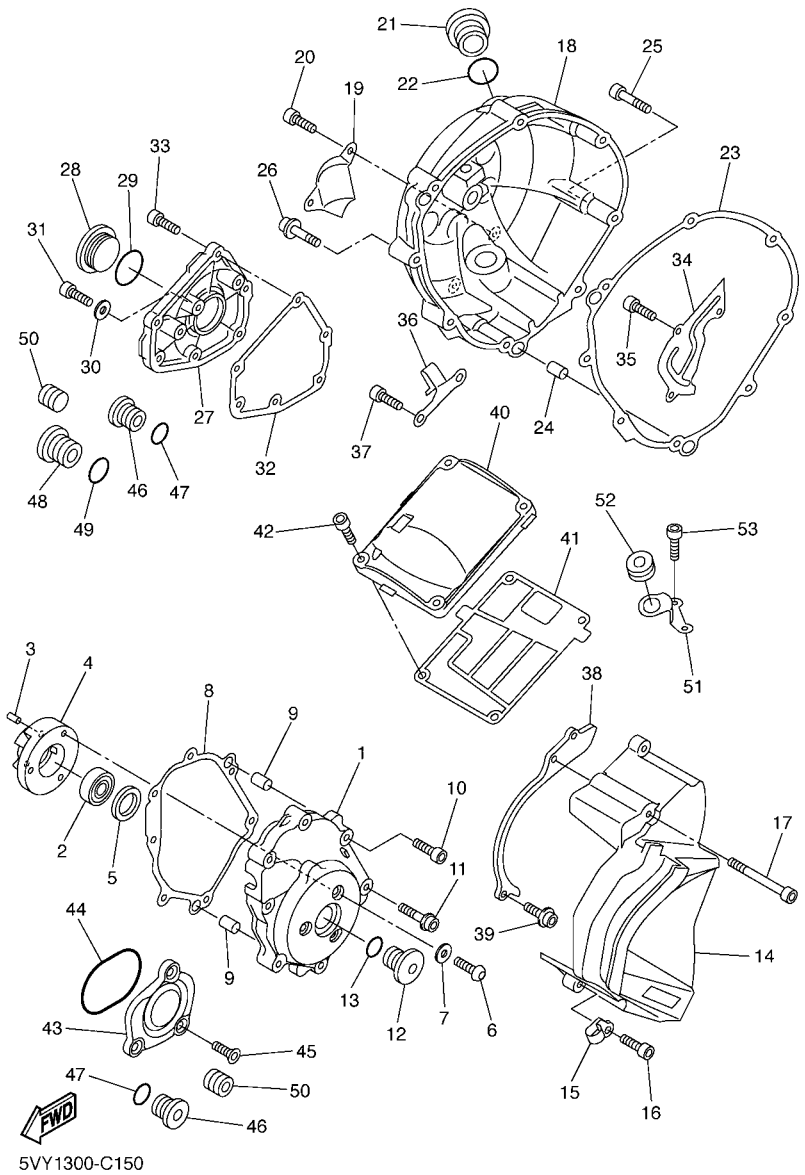

FIG. 15 CUBIERTA DE CARTER 1

REF. Nº	CODIGO Nº	DESCRIPCION	5VY7					OBSERVACIONES
28	90340–32004	TORNILLO, DE DRENAJE	1					
29	93210–32172	ANILLO O	1					
30	90430–08143	JUNTA	1					
31	92014–08016	PERNO	1					
32	5VY–15456–00	EMPAQ CUBTA.BOMBA ACEITE 1	1					
33	90109–06014	PERNO	6					
34	5VY–11165–00	PLACA RESPIRADERO	1					
35	90110–06018	TORNILLO ALLEN	3					
36	5VY–15441–00	SOSTEN DE CABLE DE EMBRAGUE	1					
37	91314–06014	PERNO	1					
38	5VY–15113–00	PLACA	1					
39	90110–06004	TORNILLO ALLEN	2					
40	5VY–15413–00	CUBIERTA	1					
41	5VY–15462–00	EMPAQ CUBIERTA DE CARTER 3	1					
42	90109–06015	PERNO	4					
43	5VY–15431–00	CUBIERTA DE CARTER 3	1					
44	93210–57003	ANILLO O	1					
45	90151–06022	TORNILLO EMBUTIDO	3					
46	36Y–15189–00	TAPON	3					
47	93210–16325	ANILLO O	3					
48	4H7–15189–00	TAPON	1					
49	93210–22382	ANILLO O	1					
50	90340–12112	TORNILLO, DE DRENAJE	2					
51	5VY–12443–00	APOYO	1					
52	90480–13398	TAPON	1					
53	91380–06014	PERNO	2					

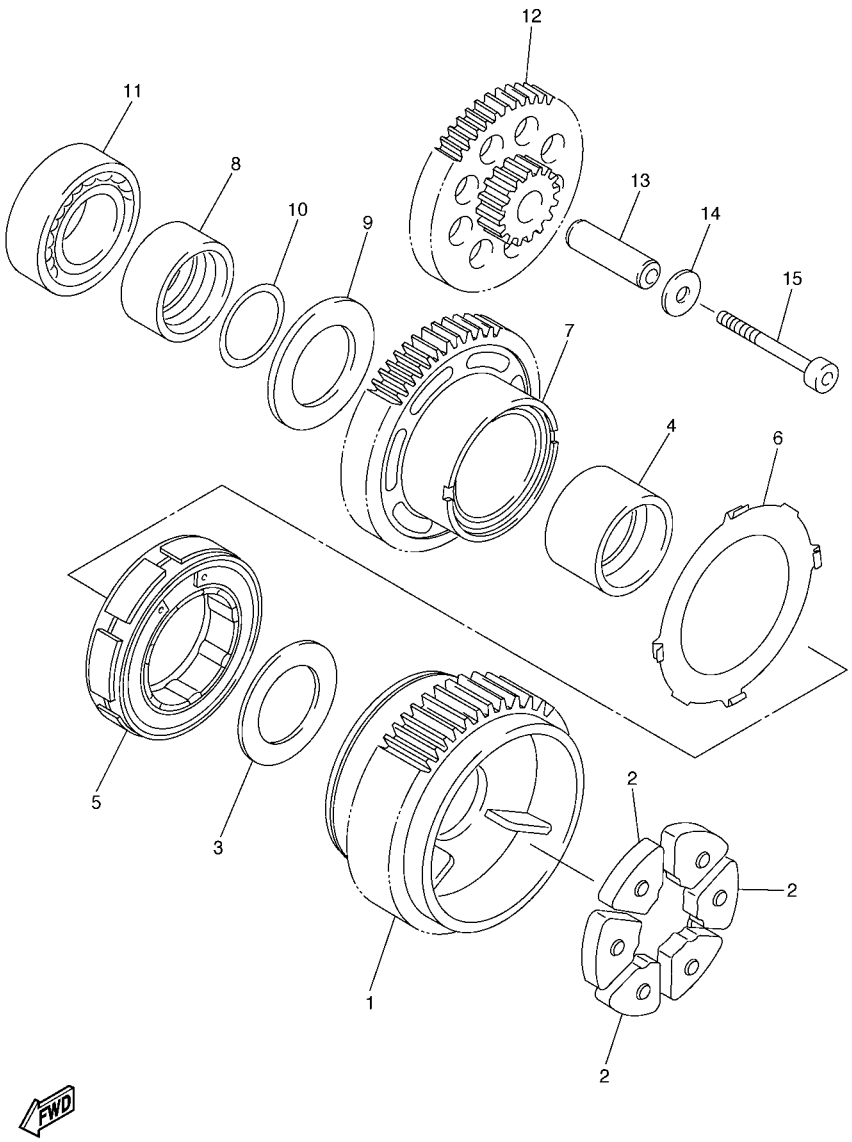

5VY1300-C160

FIG. 16 ARRANQUE

REF. Nº	CODIGO Nº	DESCRIPCION	5VY7					OBSERVACIONES
1	5VY–11537–00	ENGRANAJE TRACCION	1					
2	5VY–16155–00	AMORTIGUADOR 1	3					
3	90201–20016	ARANDELA PLANA	1					
4	5VY–11478–00	COLLAR	1					
5	5VY–15570–00	EMBRAGUE DEL ARRANQUE COMPLETA	1					
6	5VY–15586–00	PLACA	1					
7	5VY–15515–00	ENGRANAJE 3	1					
8	5VY–11445–00	ESPACIADOR	1					
9	90201–20017	ARANDELA PLANA	1					
10	93210–18397	ANILLO O	1					
11	93306–20230	COJINETE	1					
12	5VY–15517–00	ENGRENAJE POSICION 2DA	1					
13	5VY–15521–00	EJE 1	1					
14	90201–06589	ARANDELA PLANA	1					
15	90110–06063	TORNILLO ALLEN	1					

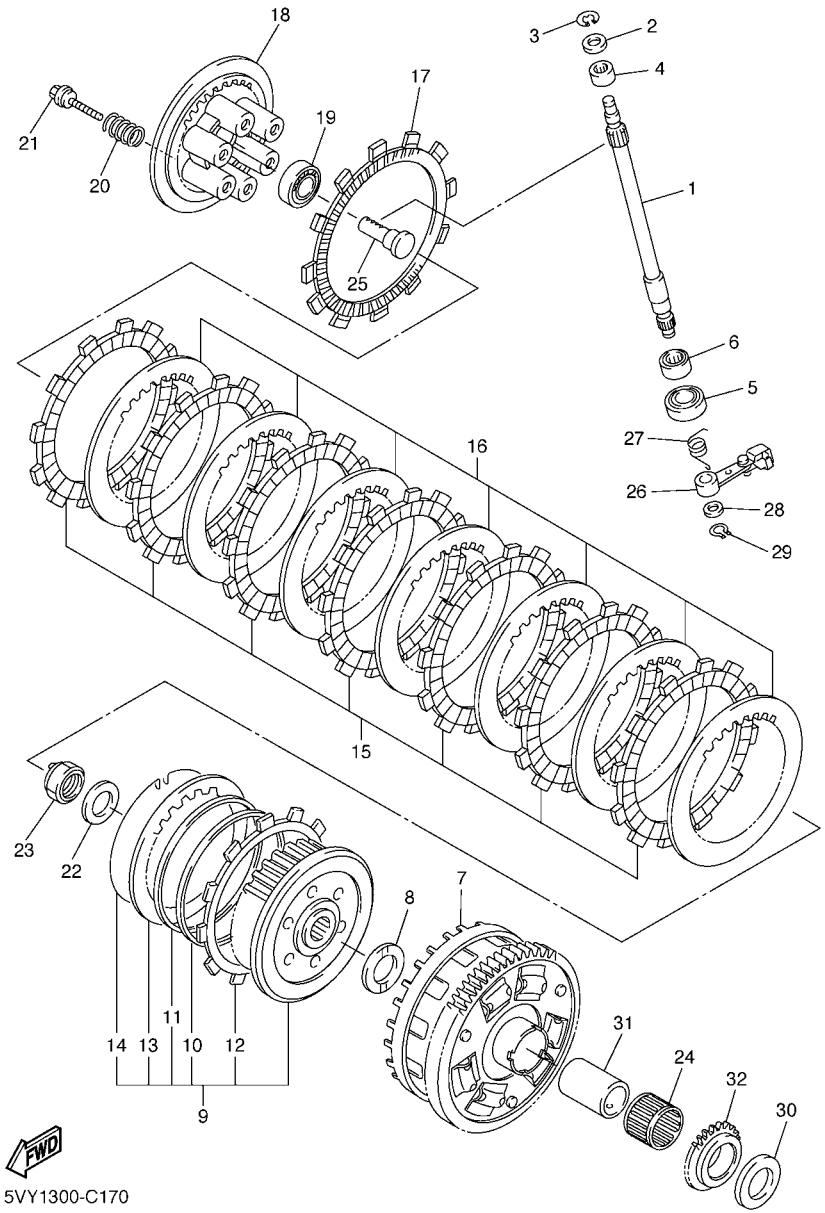

FIG. 17 EMBRAGUE

REF. Nº	CODIGO Nº	DESCRIPCION	5VY7					OBSERVACIONES
1	5VY–16382–00	EJE DE PALANCA DE EMPUJE	1					
2	92907–08600	ARANDELA	1					
3	99001–07600	PRESILLA REDONDA	1					
4	93317–11020	COJINETE	1					
5	93102–15212	SELLO ACEITE	1					
6	93315–31502	COJINETE DE RODILLOS	1					
7	5VY–16150–00	CAMPANA DE EMBRAGUE	1					
8	5VY–16154–00	ARANDELA, DE EMPUJE 1	1					
9	5VY–16370–00	COPA DE EMBRAGUE COMPLETA	1					
10	5VY–16384–00	.PLACA DE ASIENTO	1					
11	5VY–16383–00	.RESORTE DE COPA DE EMBRAGUE	1					
12	5VY–16331–00	.DISCO, DE FRICCION	1					
13	5VY–16325–00	.DISCO, DE EMBRAGUE	1					
14	4X7–16385–00	.RESORTE DE COPA DE EMBRAGUE	1					
15	5VY–16321–00	PLACA DE FRICCION	7					
16	5VY–16325–00	DISCO, DE EMBRAGUE	7					
17	5VY–16330–00	PLACA DE FRICCION 2	1					
18	5VY–16351–00	PLATO DE PRESION	1					
19	93306–00304	COJINETE	1					
20	90501–230A0	RESORTE DE COMPRESION	6					
21	90159–06009	TORNILLO CON VALONA	6					
22	90208–20001	ARANDELA DE RESORTE CONICO	1					
23	90179–20007	TUERCA	1					
24	93310–232R9	COJINETE DE RODILLOS	1					
25	4XV–16356–01	VARILLA DE EMPUJE 1	1					
26	5VY–16340–00	PALANCA DE EMPUJE COMPLETA	1					
27	90508–164B2	RESORTE DE TORSION	1					

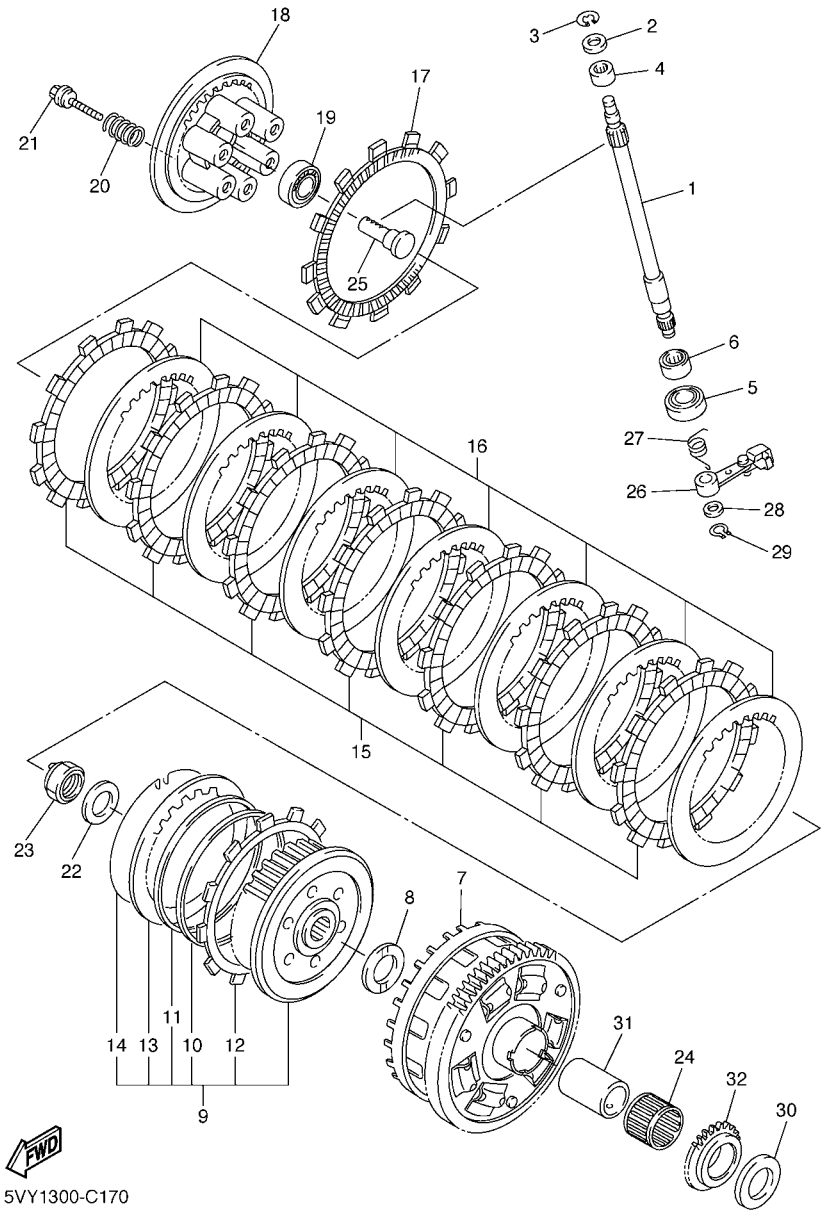

FIG. 17 EMBRAGUE

REF. Nº	CODIGO Nº	DESCRIPCION	5VY7					OBSERVACIONES
28	90201–10029	ARANDELA PLANA	1					
29	99009–10400	PRESILLA REDONDA	1					
30	5VY–16164–00	PLACA DE EMPUJE 2	1					
31	5VY–16181–00	SEPARADOR	1					
32	5VY–13354–00	CATALINA	1					

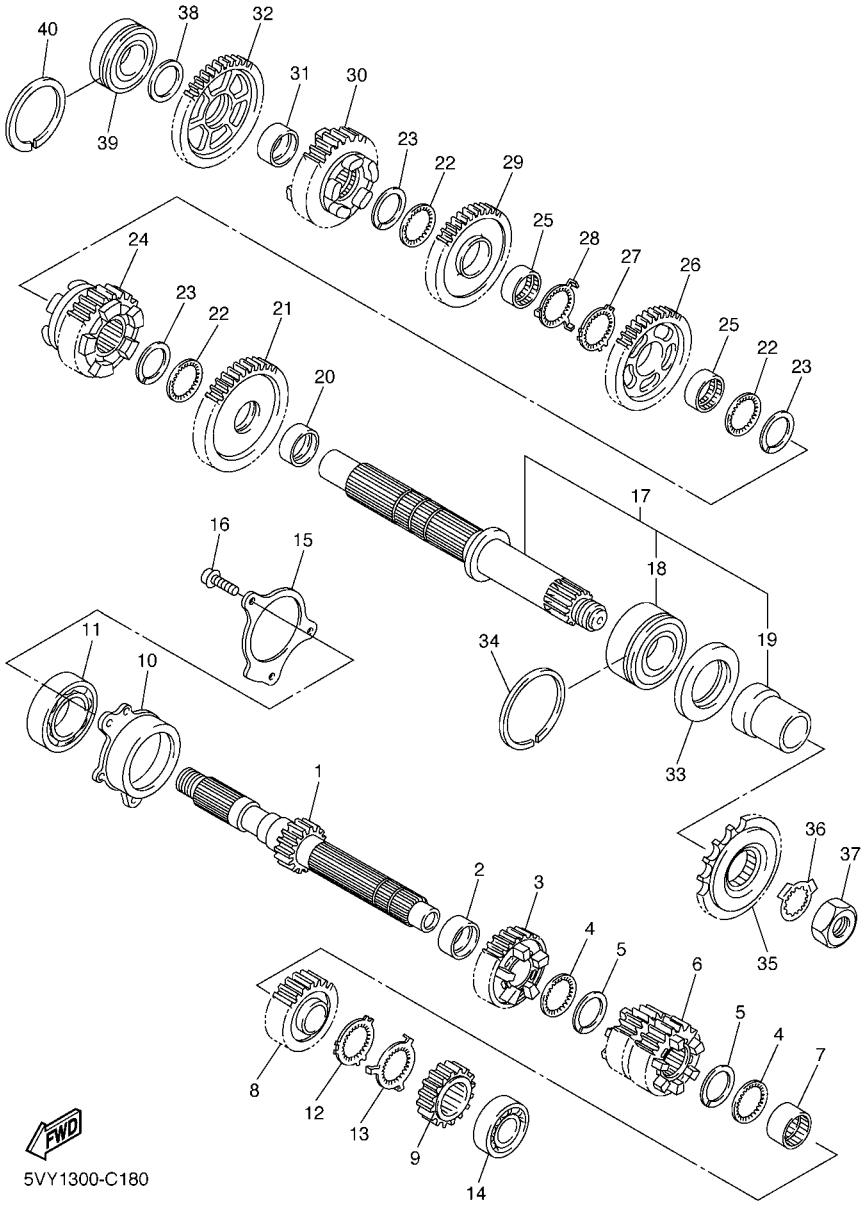

FIG. 18 TRANSMISION

REF. Nº	CODIGO Nº	DESCRIPCION	5VY7					OBSERVACIONES
1	5VY–17411–00	EJE PRIMARIO (15T)	1					
2	90387–28003	COLLAR	1					
3	5VY–17151–00	ENGRANAJE PINON DE 5TA (22T)	1					
4	90209–25011	ARANDELA DE SEPARACION	2					
5	93440–28184	SEGURO	2					
6	5VY–17131–00	ENGRANAJE PINON DE 3RA(21/23T)	1					
7	90387–25007	COLLAR	1					
8	5VY–17161–00	ENGRANAJE PINON 6TA (26T)	1					
9	5VY–17121–00	ENGRANAJE DE PINON DE 2DA(16T)	1					
10	5VY–15163–00	CAJA DE COJINETE 1	1					
11	93306–20652	COJINETE	1					
12	90214–25004	ARANDELA DE POSICION	1					
13	90214–25003	ARANDELA DE POSICION	1					
14	93306–27208	COJINETE	1					
15	5VY–17446–00	PLACA	1					
16	90110–06027	TORNILLO ALLEN	3					
17	5VY–17402–00	EJE DE TRACCION COMPLETO	1					
18	93305–20605	.COJINETE	1					
19	5VY–17442–00	.COLLAR DISTANCIADOR	1					
20	90387–31003	COLLAR	1					
21	5VY–17221–10	ENGRANAJE RUEDA DE 2DA (33T)	1					
22	90209–28008	ARANDELA DE SEPARACION	3					
23	93440–31187	SEGURO	3					
24	5VY–17261–10	ENGRANAJE DE RUEDA 6TA (33T)	1					
25	90387–28004	COLLAR	2					
26	5VY–17241–00	ENGRANAJE DE RUEDA 4TA (35T)	1					
27	90214–29002	ARANDELA DE POSICION	1					

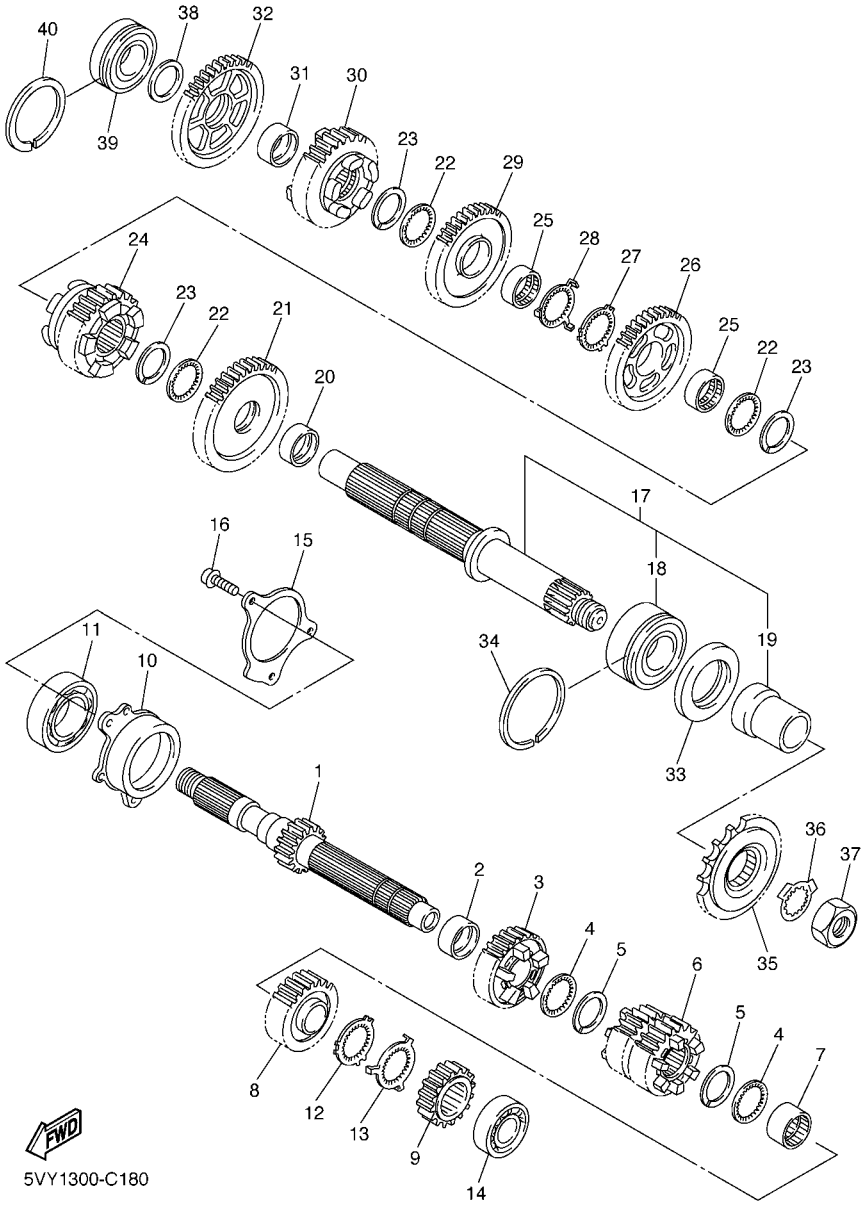

FIG. 18 TRANSMISION

REF. Nº	CODIGO Nº	DESCRIPCION	5VY7					OBSERVACIONES
28	90214–28002	ARANDELA DE POSICION	1					
29	5VY–17231–00	ENGRANAJE RUEDA DE 3RA (37T)	1					
30	5VY–17251–00	ENGRANAJE DE RUEDA 5TA (30T)	1					
31	90387–25008	COLLAR	1					
32	5VY–17211–00	ENGRANAJE RUEDA DE 1RA (38T)	1					
33	93102–40330	SELLO ACEITE	1					
34	93440–62032	SEGURO	1					
35	3CV–17460–00	RUEDA DENTADA (17T)	1					
36	90215–30233	ARANDELA DE CIERRE	1					
37	90179–22003	TUERCA	1					
38	90201–257H0	ARANDELA PLANA	1					
39	93306–205A2	COJINETE	1					
40	93440–52009	SEGURO	1					

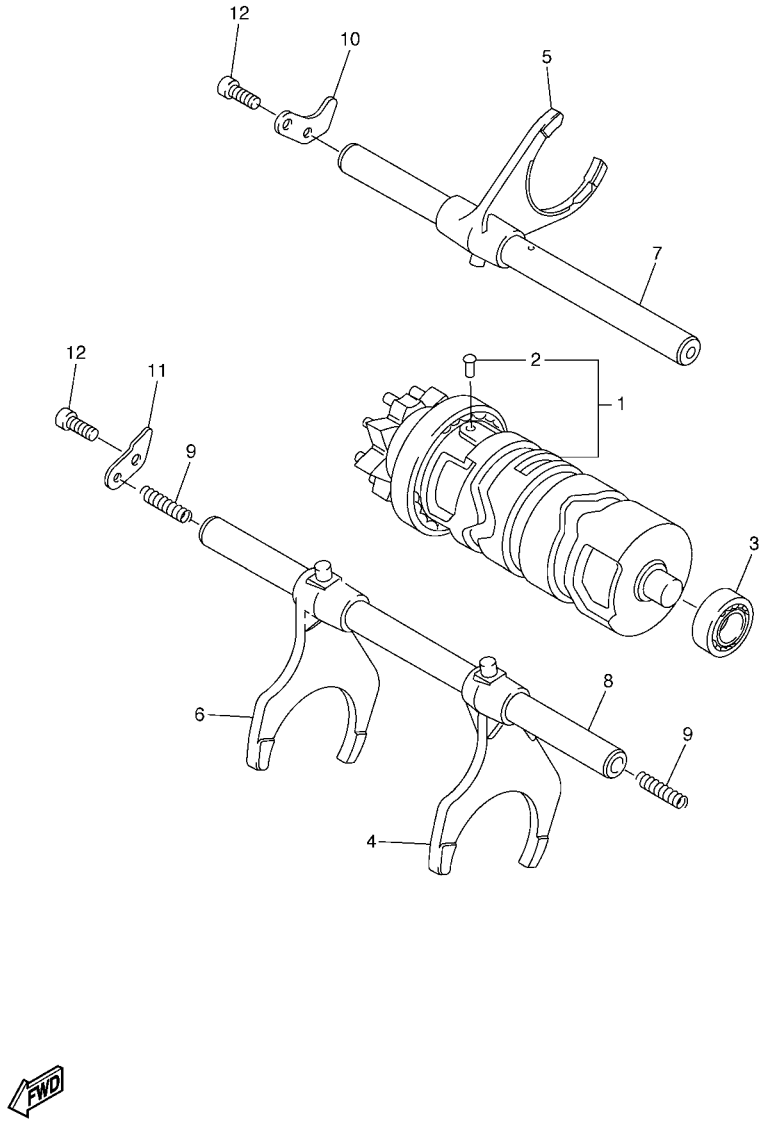

FIG. 19 LEVA DE CAMBIO & HORQUILLA

REF. Nº	CODIGO Nº	DESCRIPCION	5VY7					OBSERVACIONES
1	5VY–18540–00	LEVADEL CAMBIO COMPLETA	1					
2	136–18542–00	.PUNTO MVERTO	1					
3	93306–00106	COJINETE	1					
4	5VY–18511–01	HORQUILLA DEL CAMBIO 1	1					
5	5VY–18512–01	HORQUILLA DEL CAMBIO 2	1					
6	5VY–18513–01	HORQUILLA DEL CAMBIO 3	1					
7	5VY–18531–00	BARRA GUIA HORQ. CAMBIO 1	1					
8	5VY–18535–00	BARRA GUIA HORQ.CAMBIO 2	1					
9	90501–064L1	RESORTE DE COMPRESION	2					
10	5VY–18536–00	TOPE DE PALANCA SELECTOR	1					
11	5VY–18562–00	PLACA DE TOPE 2	1					
12	90110–06018	TORNILLO ALLEN	2					

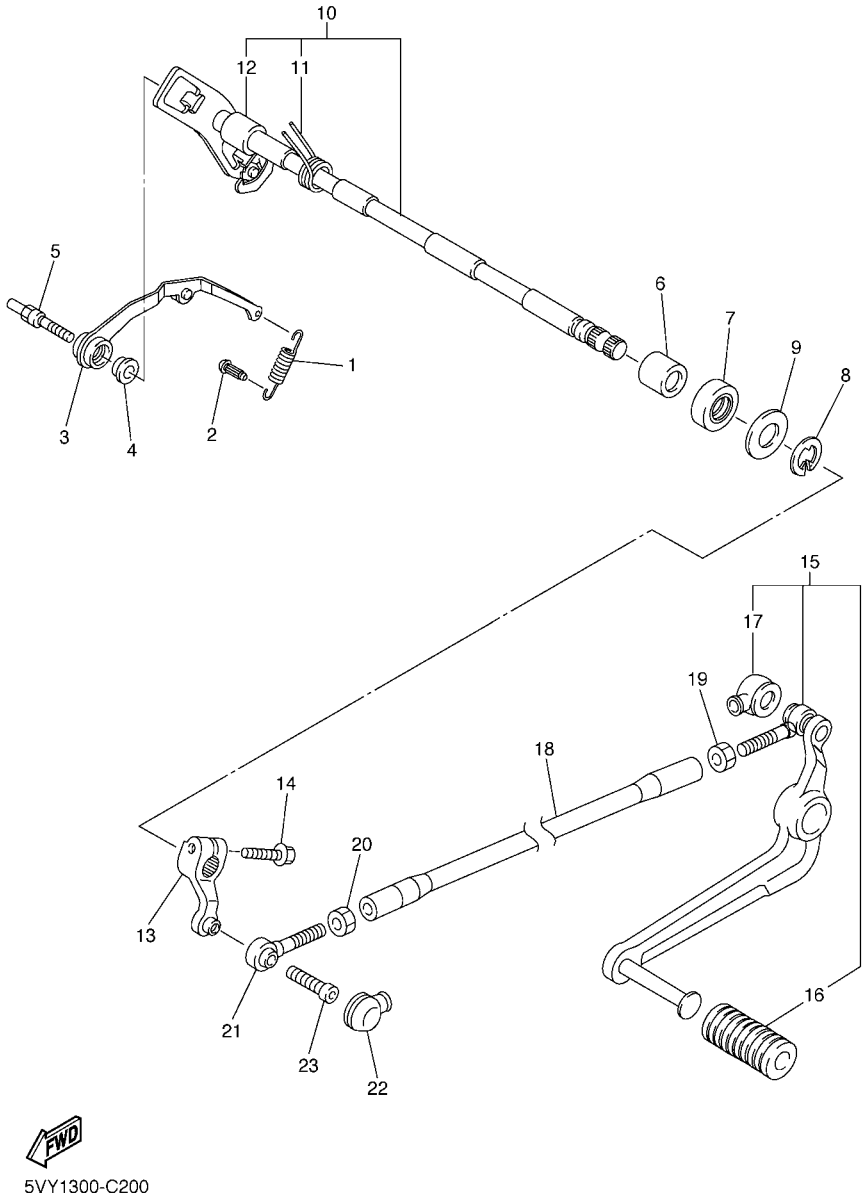

FIG. 20 EJE DE CAMBIO & PEDAL

REF. Nº	CODIGO Nº	DESCRIPCION	5VY7					OBSERVACIONES
1	5VY–18144–00	GANCHO DE RESORTE	1					
2	132–16346–00	GANCHO DE RESORTE	1					
3	5VY–18140–00	PALANCA DE TOPE COMPLETA	1					
4	90387–0804S	COLLAR	1					
5	5VY–18127–00	PASADOR DE PALANCA	1					
6	93317–11287	COJINETE	2					
7	93101–12004	SELLO ACEITE	1					
8	99001–10600	PRESILLA REDONDA	1					
9	90201–12575	ARANDELA PLANA	2					
10	5VY–18101–00	EJE SELECTOR COMPLETO	1					
11	90508–32020	.RESORTE DE TORSION	1					
12	90387–1211D	.COLLAR	1					
13	5VY–18112–00	BRAZO DEL CANBIO	1					
14	95027–06020	PERNO, DE BRIDA	1					
15	5VY–18110–00	PEDAL DE CAMBIO COMPLETO	1					
16	5EB–18113–00	.FUNDA DEL PEDAL DEL CAMBIO	1					
17	4XV–18154–00	.CUBIERTA GUARDAPOLVO	1					
18	5VY–18115–00	VARILLA DEL CANBIO	1					
19	90170–06228	TUERCA	1					
20	95304–06700	TUERCA	1					
21	5LV–18116–00	VARILLA DE CONECTOR 1	1					
22	4XV–18154–00	CUBIERTA GUARDAPOLVO	1					
23	90111–06019	TORNILLO	1					

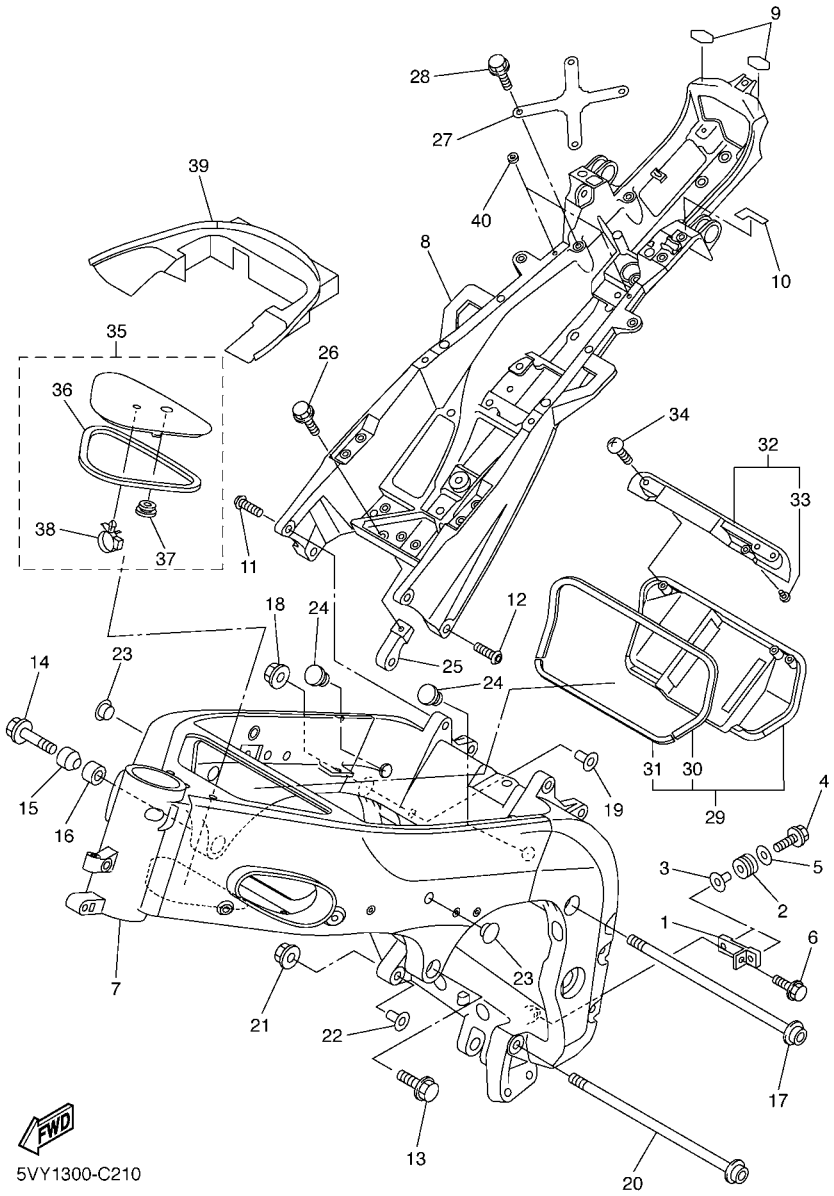

FIG. 21 CUADRO

REF. Nº	CODIGO Nº	DESCRIPCION	5VY7					OBSERVACIONES
1	5VY–2116J–00	SOPORTE 7	1					
2	90480–14005	TAPON	2					
3	90387–063E6	COLLAR	2					
4	95027–06020	PERNO, DE BRIDA	2					
5	90201–06M31	ARANDELA PLANA	2					
6	95024–06012	PERNO, DE BRIDA	1					
7	5VY–21110–01	ARMAZON COMPLETO	1					
8	5VY–21190–00	CUADRO TRASERO COMPLETA	1					
9	5VY–21268–00	SELLO	2					
10	5VY–21269–00	SELLO	1					
11	90149–10015	TORNILLO DE REGLAJE	2					
12	90149–10017	TORNILLO DE REGLAJE	2					
13	95024–10040	PERNO, DE BRIDA	1					
14	95024–10045	PERNO, DE BRIDA	1					
15	5VY–21414–00	COPA DE MONTANTE DE MOTOR	1					
16	5VY–21424–00	COPA DE MONTANTE DE MOTOR	1					
17	90110–10005	TORNILLO ALLEN	1					
18	90179–10696	TUERCA	1					
19	5EB–21495–00	PERNO DE AJUSTE	1					
20	90110–10005	TORNILLO ALLEN	1					
21	90179–10696	TUERCA	1					
22	5EB–21495–00	PERNO DE AJUSTE	1					
23	90338–15004	TAPON	2					
24	90338–23004	TAPON	2					
25	5VY–21435–00	SOPORTE DE SILENCIADOR	1					
26	90109–06056	PERNO	1					
27	5VY–21131–00	SOPORTE	1					

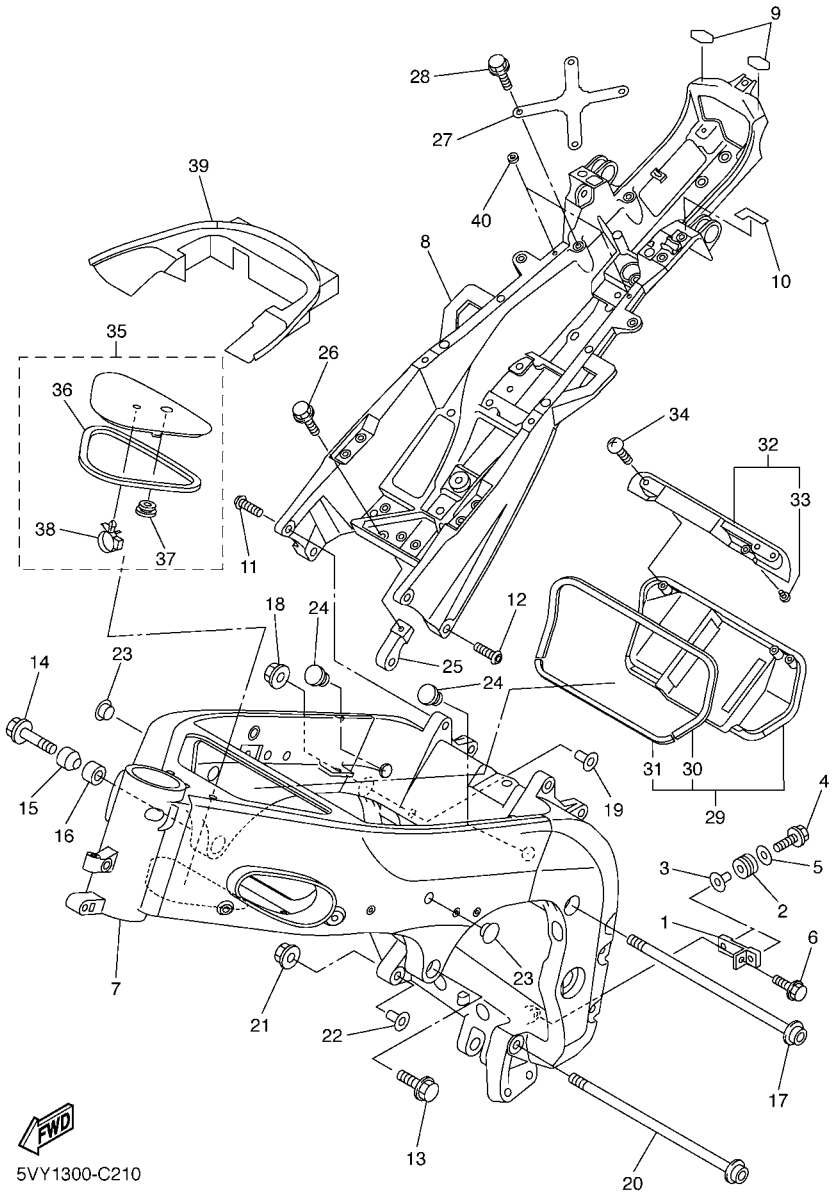

FIG. 21 CUADRO

REF. Nº	CODIGO Nº	DESCRIPCION	5VY7					OBSERVACIONES
28	95827–06016	TUERCA DE REBORDE	4					
29	5VY–2110M–00	CUBIERTA COMPLETO	1					
30	5VY–2174X–00	.AMORTIGUADOR	1					
31	5VY–21746–00	.AMORTIGUADOR	1					
32	5VY–2131P–00	CUBIERTA	1					
33	90338–06018	.TAPON	1					
34	90167–05080	TORNILLO DE ROSCA HEMBRA	3					
35	5VY–2110M–10	CUBIERTA COMPLETO	1					
36	5VY–2174Y–00	.AMORTIGUADOR	1					
37	90480–01333	.TAPON	1					
38	90464–16006	.BRIDA	1					
39	5VY–2117R–00	CUBIERTA 4	1					
40	5SL–84753–00	AMORTIGUADOR	2					

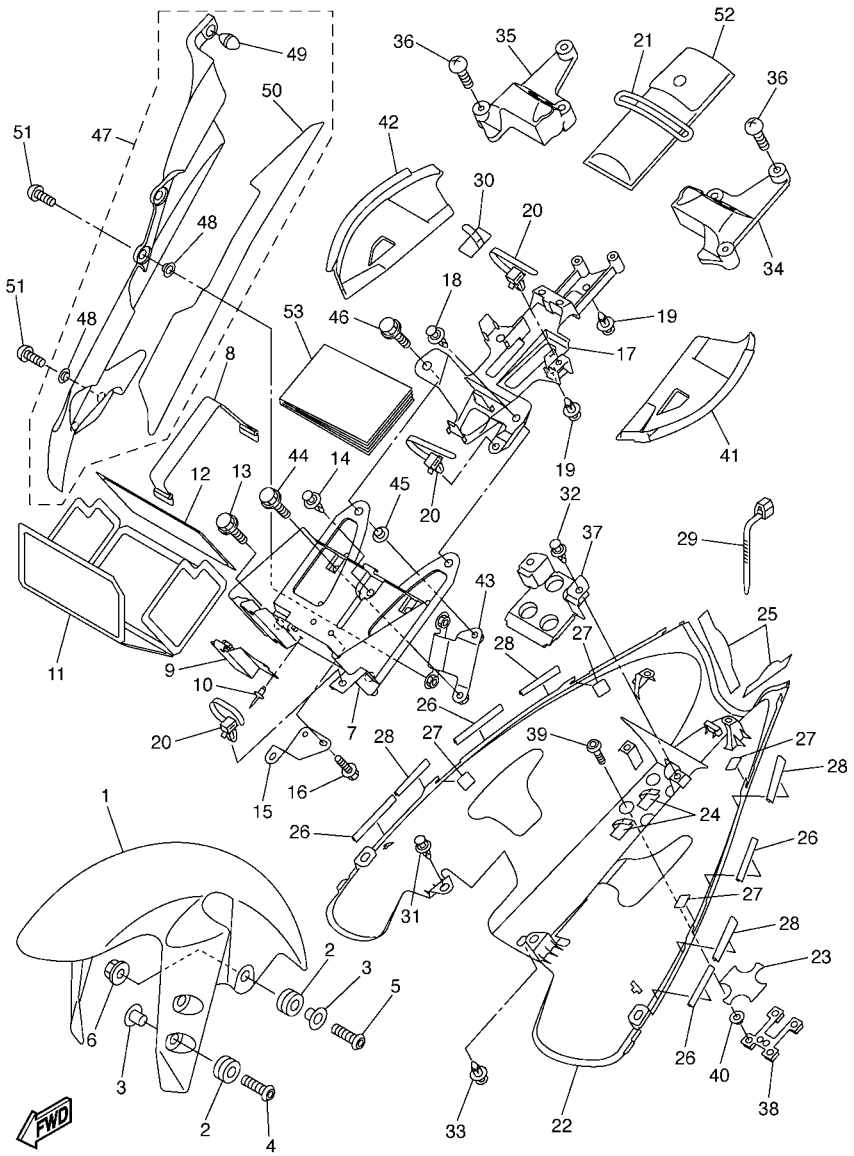

FIG. 22 GUARDABARRO

REF. Nº	CODIGO Nº	DESCRIPCION	5VY7					OBSERVACIONES
1	5PW–21511–00–P3	GUARDABARRO DELANTERO	1					UR DRMK
	5PW–21511–00–P1	GUARDABARRO DELANTERO	1					UR DPBMC
	5PW–21511–00–P5	GUARDABARRO DELANTERO	1					UR BS4
2	90480–12072	TAPON	6					
3	90387–065J6	COLLAR	6					
4	90111–06043	TORNILLO	4					
5	90111–06030	TORNILLO	2					
6	95707–06500	TUERCA DE BRIDA	2					
7	5VY–8212B–00	CAJA DE BATERIA	1					
8	133–82131–00	TIRANTE DE BATERIA	1					
9	5VY–21617–00	SOPORTE DE GUARDABARRO	1					
10	90267–32161	REMACHE CIEGO	4					
11	5VY–82122–00	ASIENTO DE BATERIA	1					
12	5VY–82123–00	ASIENTO DE BATERIA	1					
13	90109–06043	PERNO	2					
14	90269–07076	REMACHE	1					
15	5VY–2164G–00	APOYO 2	1					
16	95827–06016	TUERCA DE REBORDE	2					
17	5VY–8212C–00	CAJETIN DE BATERIA 2	1					
18	90269–07076	REMACHE	1					
19	90269–07077	REMACHE	3					
20	90464–12036	BRIDA	3					
21	4XV–21376–00	BANDA DE HERRAMIENTA	1					
22	5VY–21611–00–P0	GUARDABARRO TRASERO	1					UR DRMK
	5VY–21611–00–P1	GUARDABARRO TRASERO	1					UR DPBMC
	5VY–21611–00–P3	GUARDABARRO TRASERO	1					UR BS4
23	5VY–21669–00	SELLO	1					

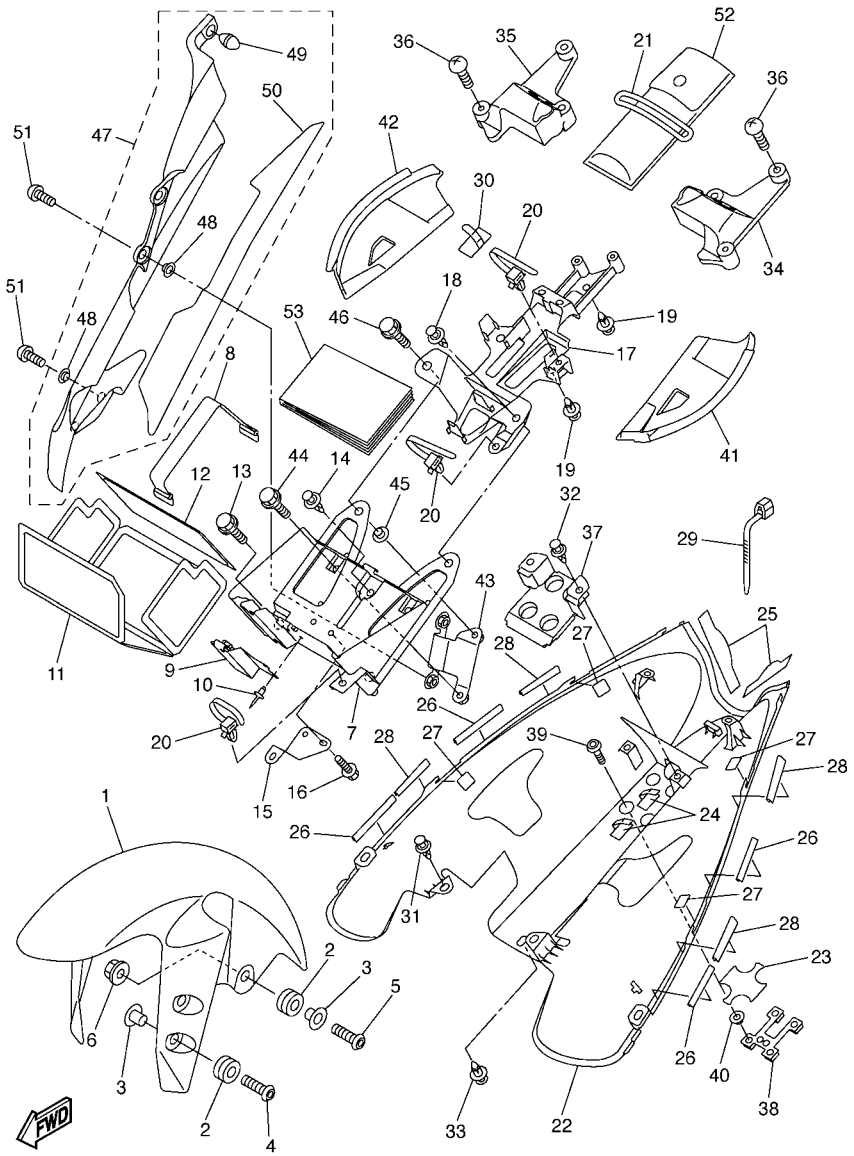

FIG. 22 GUARDABARRO

REF. Nº	CODIGO Nº	DESCRIPCION	5VY7					OBSERVACIONES
24	90465–04020	BRIDA	2					
25	5VY–21639–00	AMORTIGUADOR 2	2					
26	5PW–21732–00	SELLO 1	4					
27	1UF–15379–00	SELLO DE CARTER	4					
28	5VY–21732–00	SELLO 1	4					
29	90464–13073	BRIDA	2					
30	90465–04020	BRIDA	1					
31	90269–06081	REMACHE	2					
32	90269–06081	REMACHE	2					
33	90269–07077	REMACHE	1					
34	5VY–2163A–00	CUBIERTA TRAS GUARDABARRO 1	1					
35	5VY–2163E–00	CUBIERTA TRAS GUARDABARRO 2	1					
36	97707–50014	TORNILLO ROSCA HEMBRA	6					
37	5VY–21652–00	PROTECTOR	1					
38	5VY–2161G–00	SOPORTE 6	1					
39	90111–06052	TORNILLO	4					
40	90387–06071	COLLAR	4					
41	5VY–2164K–00	PARCHE 5	1					
42	5VY–2164L–00	PARCHE 6	1					
43	5VY–2164F–00	APOYO 1	1					
44	90119–05011	TORNILLO CON ARANDELA	1					
45	90387–05017	COLLAR	1					
46	90119–05193	TORNILLO CON ARANDELA	1					
47	5VY–27490–00	PROTECTOR COMPL.	1					
48	90387–0603J	.COLLAR	4					
49	5VY–14757–00	.AMORTIGUADOR SILENCIADOR 2	1					
50	5VY–2838G–00	.ASIENTO	1					

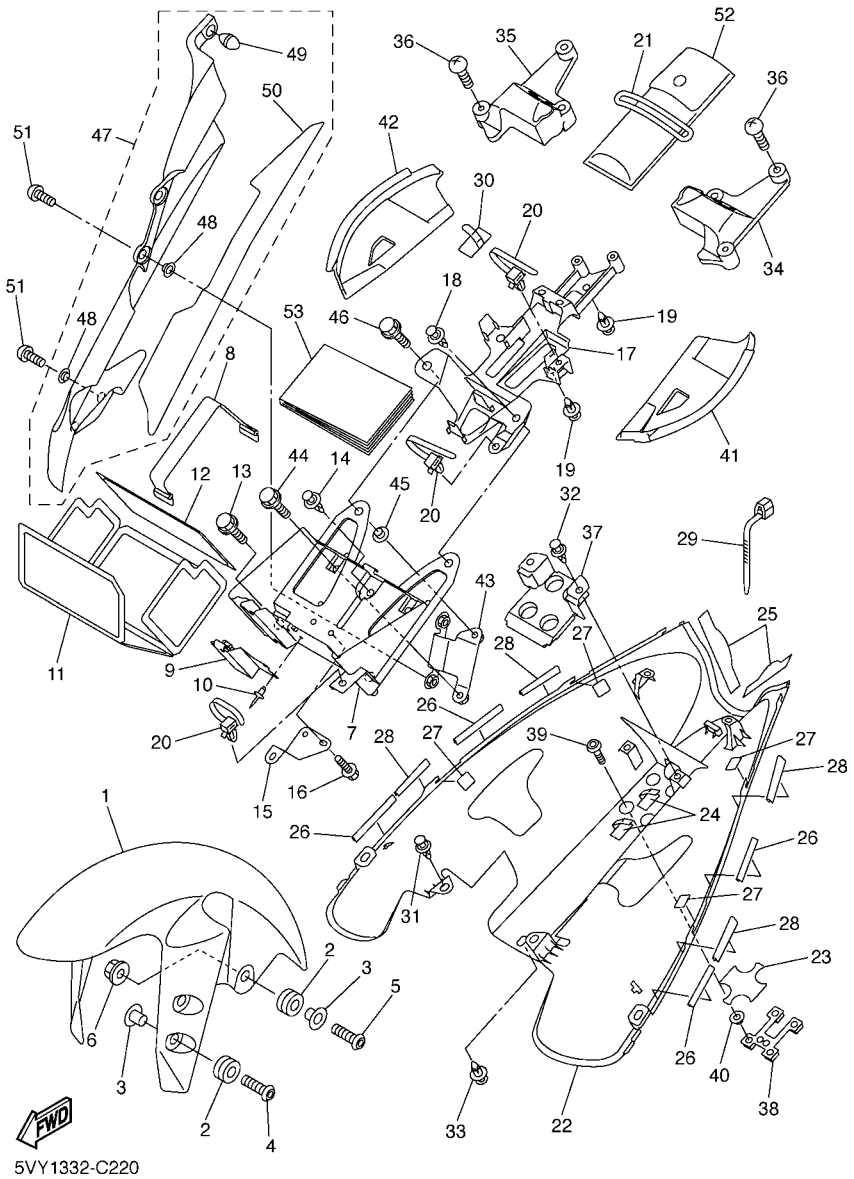

FIG. 22 GUARDABARRO

REF. Nº	CODIGO Nº	DESCRIPCION	5VY7					OBSERVACIONES
51	90149–06298	TORNILLO DE REGLAJE	4					
52	5VY–28100–00	JUEGO DE HERRAMIENTAS	1					
53	5VY–28199–S1	MANUAL DEL PROPIETARIO	1					

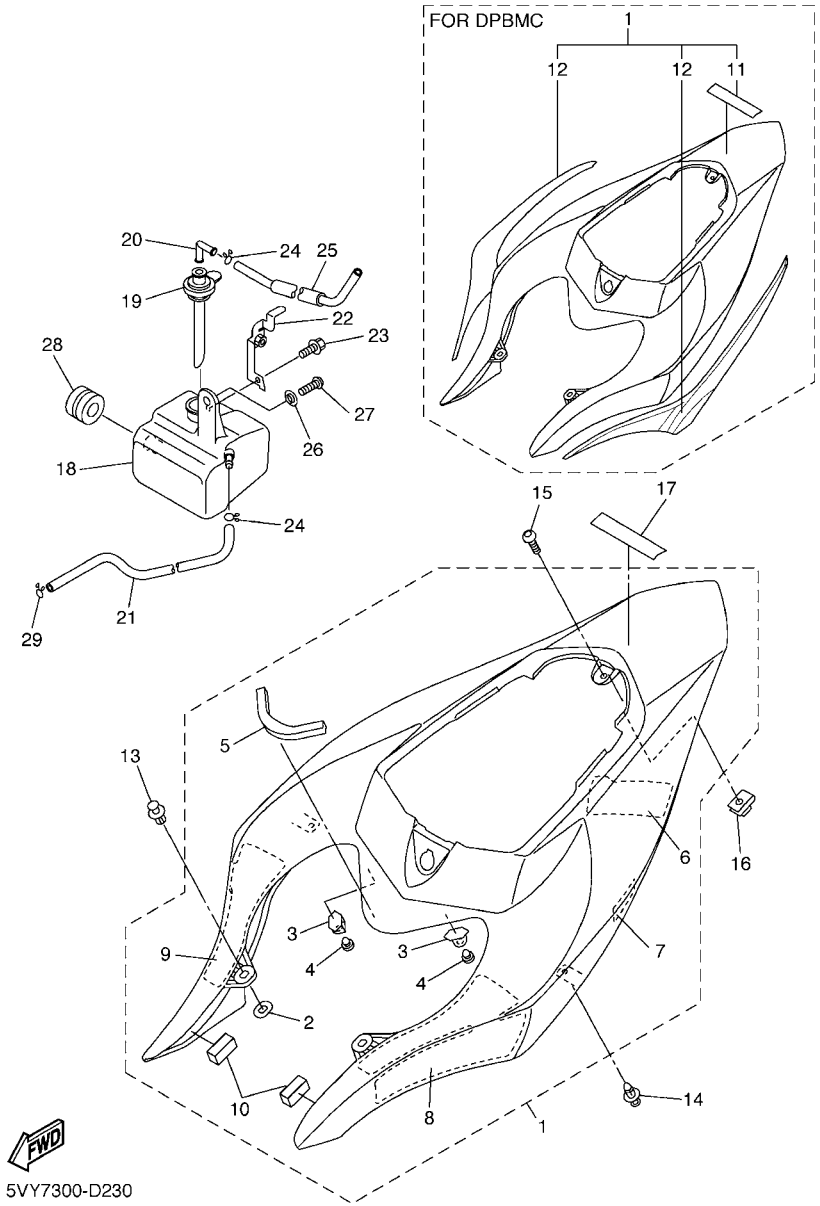

FIG. 23 CUBIERTA LATERAL

REF. Nº	CODIGO Nº	DESCRIPCION	5VY7					OBSERVACIONES
1	5VY–21710–01–P0	CUBIERTA LATERAL COMPLETA 1	1					UR DRMK
	5VY–Y2171–11–P1	CUBIERTA, LATERAL 1	1					UR DPBMC
	5VY–21710–01–P3	CUBIERTA LATERAL COMPLETA 1	1					UR BS4
2	5PW–2174X–00	.AMORTIGUADOR	2					
3	5VY–2172E–00	.SOPORTE,CUBIERTA LATERAL 1	2					
4	90338–06018	.TAPON	2					
5	5VY–21747–00	.AMORTIGUADOR	1					
6	1JK–21735–00	.SELLO 2	1					
7	5PW–21732–00	.SELLO 1	1					
8	5VY–2172P–00	.ASIENTO, 1	1					
9	5VY–2173P–00	.ASIENTO, 2	1					
10	1UJ–21717–00	.AMORTIGUADOR	2					
11	99241–00080	.EMBLEMA, YAMAHA	1					PARA DPBMC
12	5VY–2173L–00	.JUEGO DE CALCOMANIAS	1					PARA DPBMC
13	90269–07076	REMACHE	2					
14	90269–06011	REMACHE	2					
15	90111–05007	TORNILLO	1					
16	90183–05076	TUERCA DE RESORTE	1					
17	99244–00080	EMBLEMA, YAMAHA	1					UR PARA DRMK
	99246–00080	EMBLEMA, YAMAHA	1					UR PARA BS4
18	5VY–21871–00	TANQUE DE RECUPERACION	1					
19	5VY–21875–00	TAPA	1					
20	26H–21828–00	CODO	1					
21	90445–08022	TUBO	1					
22	5VY–21843–00	ESTANCIA 4	1					
23	90105–06052	TORNILLO	1					
24	90467–08075	PRESILLA	2					

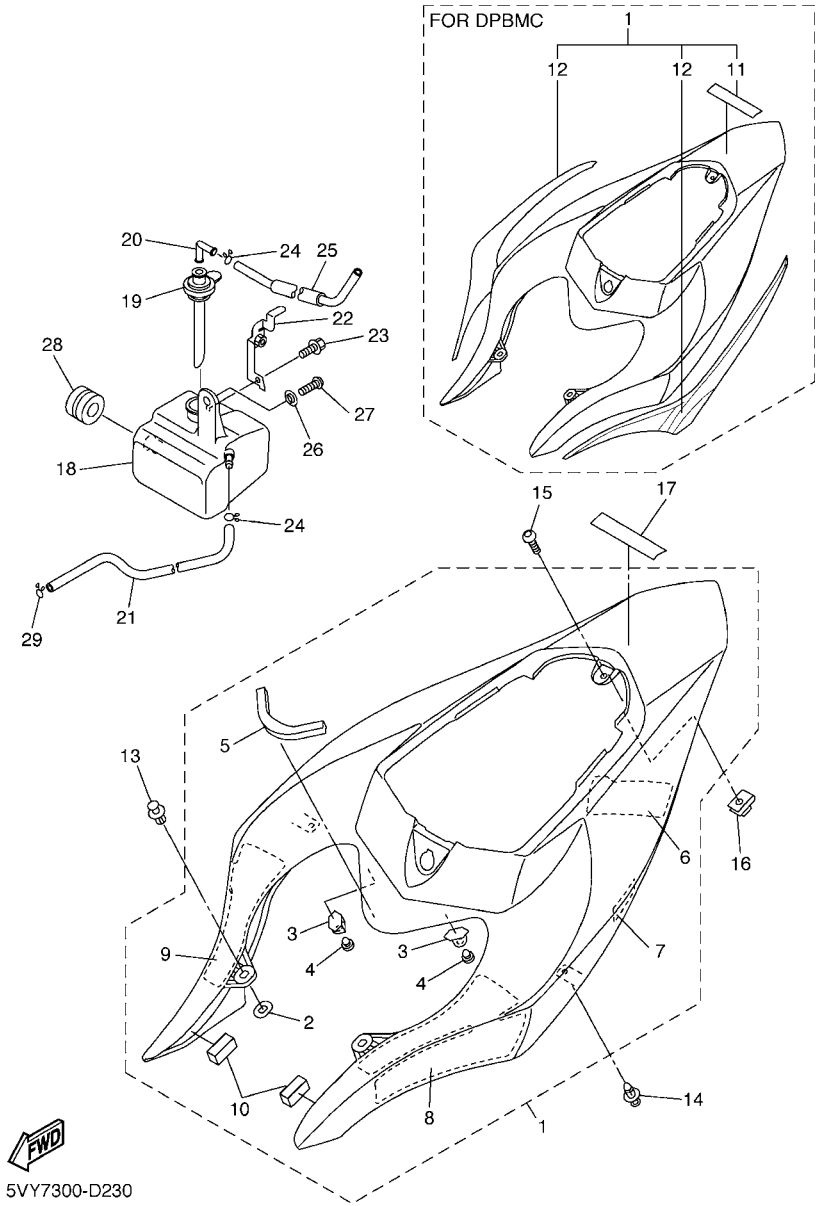

FIG. 23 CUBIERTA LATERAL

REF. Nº	CODIGO Nº	DESCRIPCION	5VY7					OBSERVACIONES
25	90445–087K6	TUBO (L700)	1					
26	90387–062M9	COLLAR	1					
27	92017–06012	PERNO	1					
28	90480–20001	TAPON	1					
29	90467–08075	PRESILLA	1					

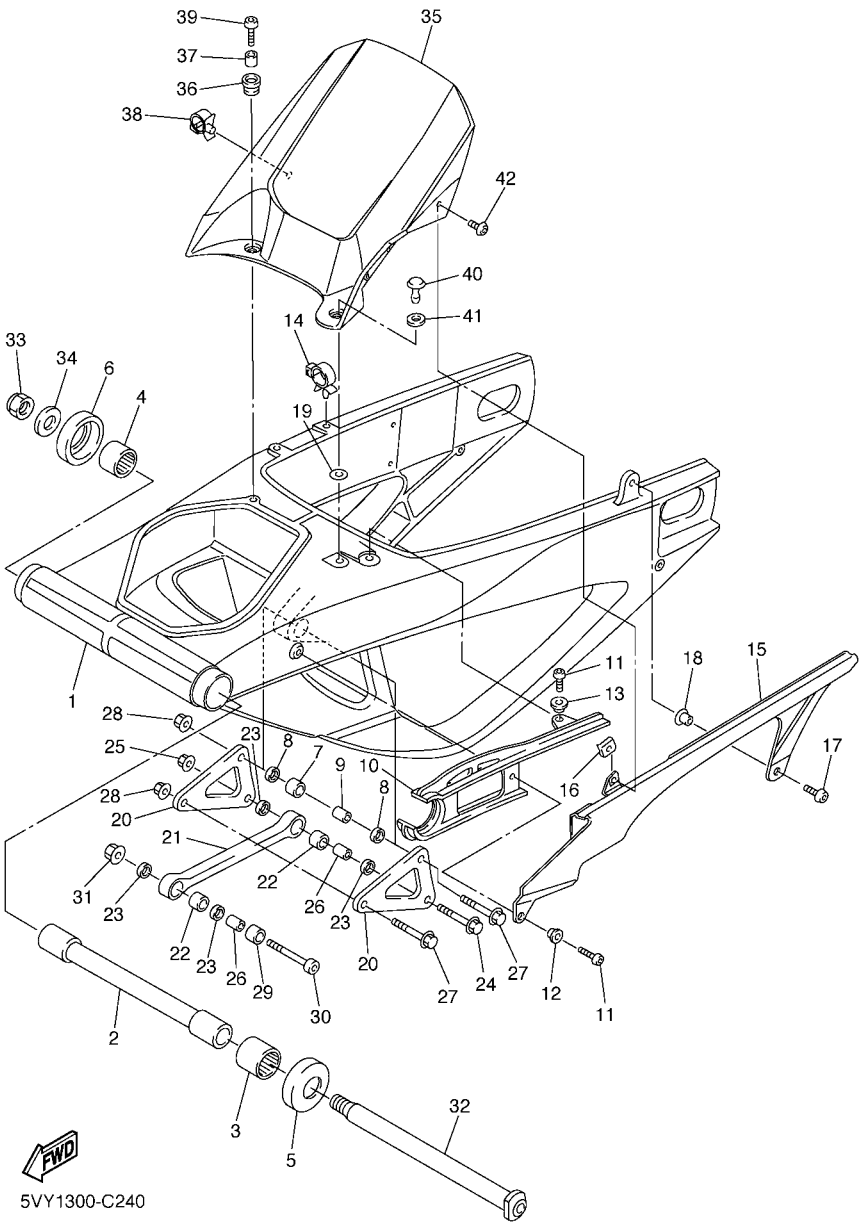

FIG. 24 BRAZO TRASERO

REF. Nº	CODIGO Nº	DESCRIPCION	5VY7					OBSERVACIONES
1	5VY–22110–00	BRAZO TRASERO COMPLETO	1					
2	5VY–22184–00	BUJE	1					
3	93317–52865	COJINETE	1					
4	93317–428U8	COJINETE	1					
5	5VY–22128–00	TAPA DE EMPIJE 1	1					
6	5VY–22128–10	TAPA DE EMPIJE 1	1					
7	93315–31758	COJINETE DE RODILLOS	1					
8	93109–17071	SELLO ACEITE	2					
9	90387–1012A	COLLAR	1					
10	5VY–22151–00	SELLO DE GUARDA	1					
11	92017–06016	PERNO	2					
12	90387–062X0	COLLAR	1					
13	90387–06066	COLLAR	1					
14	90464–16011	BRIDA	1					
15	5VY–22311–00	CABRECADENA	1					
16	90183–05076	TUERCA DE RESORTE	1					
17	90149–06298	TORNILLO DE REGLAJE	1					
18	90387–07717	COLLAR	1					
19	5VY–22873–00	SELLO 1	1					
20	5VY–2217A–00	BRAZO REEURIO	2					
21	5VY–2217M–00	BRAZO 1	1					
22	93315–31758	COJINETE DE RODILLOS	2					
23	93109–17071	SELLO ACEITE	4					
24	90105–10017	TORNILLO	1					
25	95607–10200	TUERCA DE AUTO-CIERRE	1					
26	90387–1012A	COLLAR	2					
27	90105–10017	TORNILLO	2					

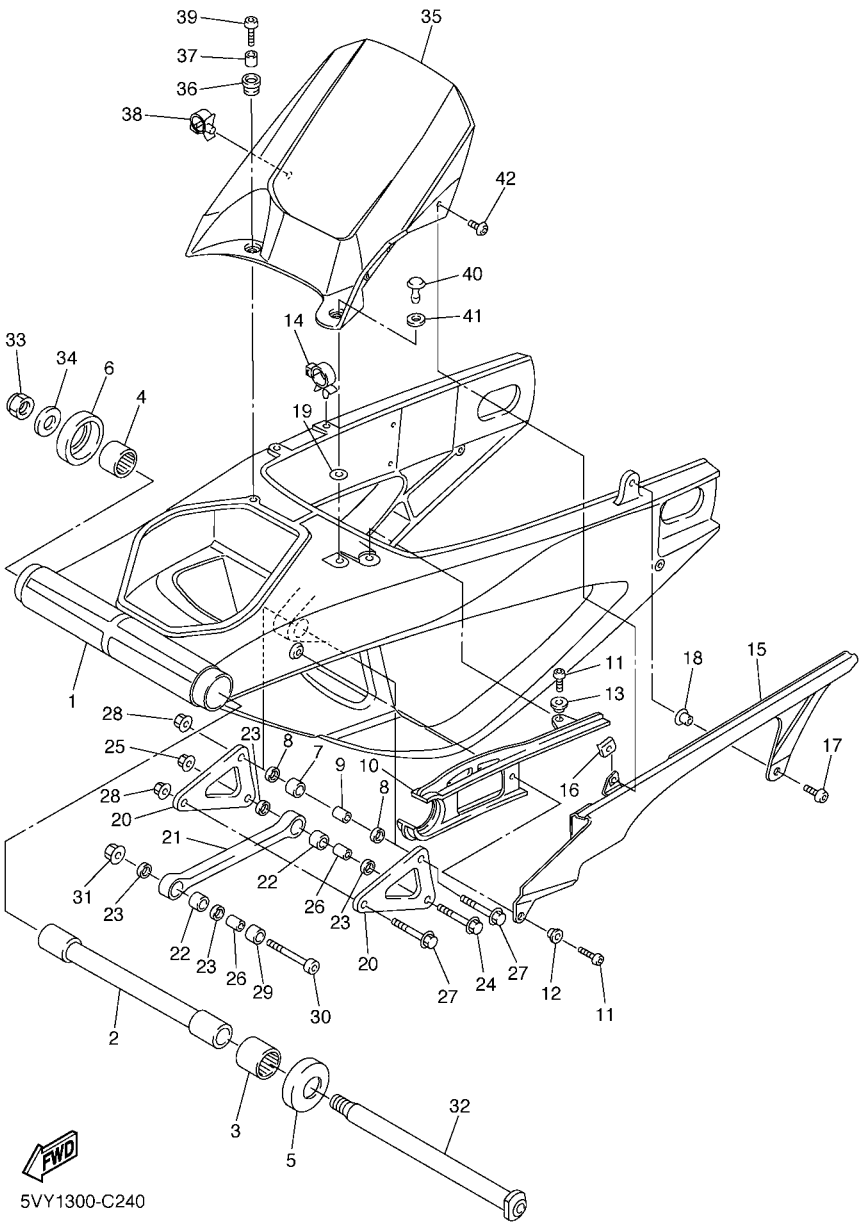

FIG. 24 BRAZO TRASERO

REF. Nº	CODIGO Nº	DESCRIPCION	5VY7					OBSERVACIONES
28	95607–10200	TUERCA DE AUTO-CIERRE	2					
29	90387–1013U	COLLAR	1					
30	90110–10011	TORNILLO ALLEN	1					
31	95607–10200	TUERCA DE AUTO-CIERRE	1					
32	5VY–22141–00	EJE DEL BARCULANTE	1					
33	90185–18167	TUERCA AUTOBLOCANTE	1					
34	90201–18013	ARANDELA PLANA	1					
35	5VY–21650–00	GUARDABARRO TRANSERO COMP.	1					
36	90480–12005	TAPON	2					
37	90387–06057	COLLAR	2					
38	90464–16012	BRIDA	1					
39	90149–06302	TORNILLO DE REGLAJE	2					
40	90269–08002	REMACHE	1					
41	5PW–28372–00	AMORTIGUADOR	1					
42	90111–05003	TORNILLO	1					

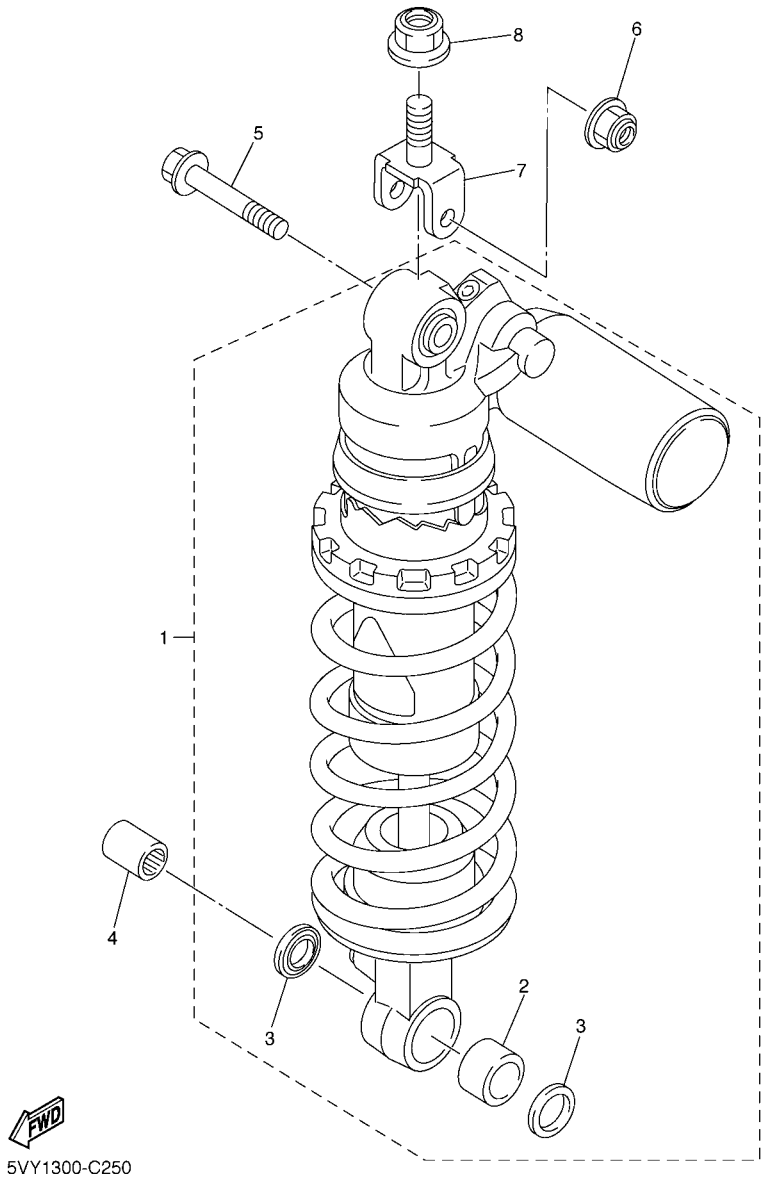

FIG. 25 SUSPENSION TRASERO

REF. Nº	CODIGO Nº	DESCRIPCION	5VY7					OBSERVACIONES
1	5VY–22210–00	AMORTIGUADOR TRASERO COMPLETO	1					
2	93315–31758	.COJINETE DE RODILLOS	1					
3	93109–17071	.SELLO ACEITE	2					
4	90387–1012A	COLLAR	1					
5	90105–10017	TORNILLO	1					
6	95607–10200	TUERCA DE AUTO-CIERRE	1					
7	5SL–22219–00	SOPORTE SUPERIOR	1					
8	95607–14200	TUERCA DE AUTO-CIERRE	1					

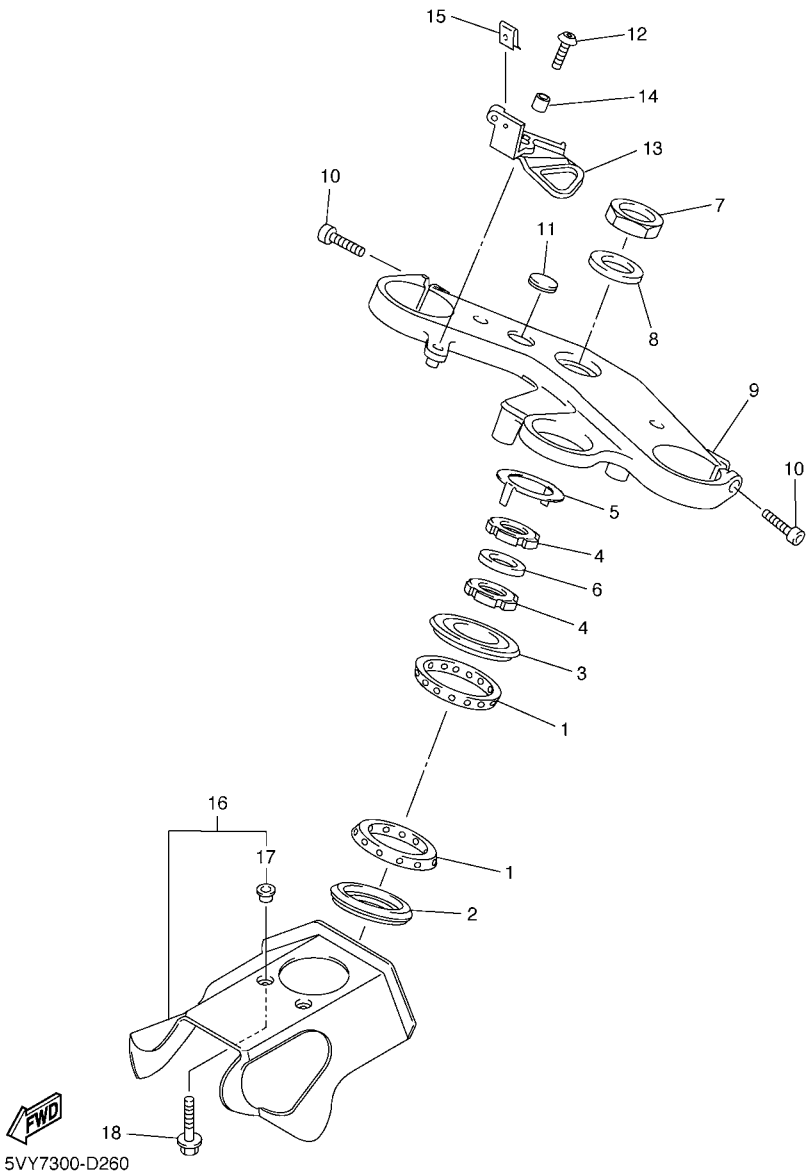

FIG. 26 DIRECCION

REF. Nº	CODIGO Nº	DESCRIPCION	5VY7					OBSERVACIONES
1	93399–99932	COJINETE	2					
2	3FV–23462–00	RETEN DE DIRECCION	1					
3	4XV–23415–01	CUBIERTA DE PISTA DE BOLAS 1	1					
4	90179–30691	TUERCA	2					
5	4XV–23418–00	ARANDELA ESPECIAL	1					
6	90202–30235	ARANDELA DE PLANA	1					
7	90170–28419	TUERCA	1					
8	90201–281U8	ARANDELA PLANA	1					
9	5VY–23435–00	PLATINA SUPERIOR	1					
10	91314–08030	PERNO	2					
11	4XV–2341B–00	EMBLEMA	1					
12	90111–06041	TORNILLO	1					
13	5VY–26292–10	SOPORTE	1					
14	90387–06057	COLLAR	1					
15	90183–050A0	TUERCA DE RESORTE	1					
16	5VY–23808–00	CUBIERTA COMPLETO	1					
17	90387–0611K	.COLLAR	2					
18	90109–065G4	PERNO	2					

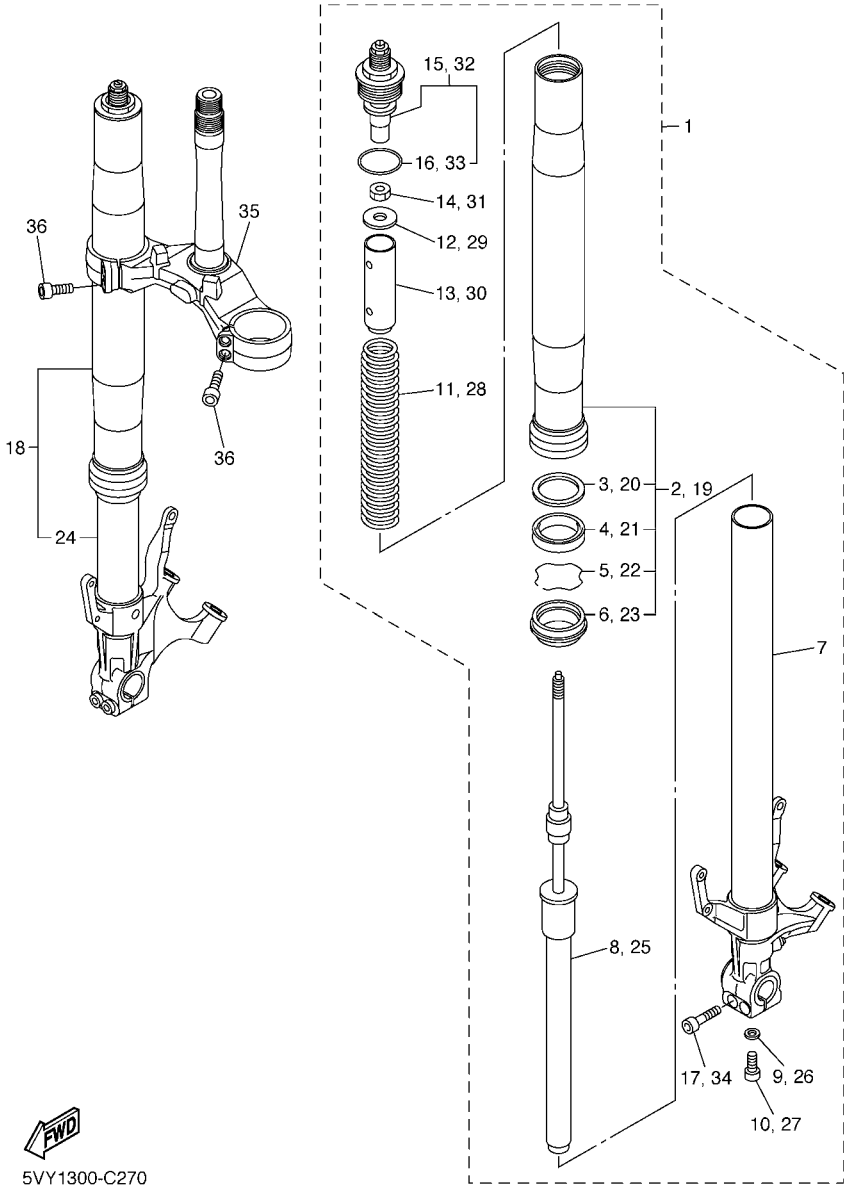

FIG. 27 HORQUILLA DELANTERA

REF. Nº	CODIGO Nº	DESCRIPCION	5VY7					OBSERVACIONES
1	5VY–23102–00	HORQUILLA DELANTERA COMPL.(MI)	1					
2	5VY–23136–00	.TUBO EXTERIOR	1					
3	5PW–23146–00	..ARANDELA DE SELLO DE ACEITE	1					
4	4PU–23145–01	..RETEN DE ACEITE	1					
5	4V4–23153–L0	..ANILLO DE ENGANCHE	1					
6	4PU–23144–00	..GUARDAPOLVO	1					
7	5VY–23110–00	.TUBO INTERIOR COMPLETO 1	1					
8	5VY–23170–00	.CILINDRO COMPL DE HORQ DELAN	1					
9	509–23158–L0	.EMPAQUE	1					
10	5UX–23181–00	.TORNILLO CABEZAHEXAGONAL	1					
11	5VY–23141–00	.RESORTE HORQUILLA DELANT.	1					
12	5VY–12277–00	.ARANDELA	1					
13	5VY–23118–00	.SEPARADOR	1					
14	3LC–23357–00	.TUERCA	1					
15	5VY–23111–00	.TAPON	1					
16	3XJ–23147–L0	..ARO	1					
17	91314–08040	.PERNO	2					
18	5VY–23103–00	HORQUILLA DELANTERA COMPL.(MD)	1					
19	5VY–23136–00	.TUBO EXTERIOR	1					
20	5PW–23146–00	..ARANDELA DE SELLO DE ACEITE	1					
21	4PU–23145–01	..RETEN DE ACEITE	1					
22	4V4–23153–L0	..ANILLO DE ENGANCHE	1					
23	4PU–23144–00	..GUARDAPOLVO	1					
24	5VY–23120–00	.TUBO INTERIOR COMPLETO 2	1					
25	5VY–23170–00	.CILINDRO COMPL DE HORQ DELAN	1					
26	509–23158–L0	.EMPAQUE	1					
27	5UX–23181–00	.TORNILLO CABEZAHEXAGONAL	1					

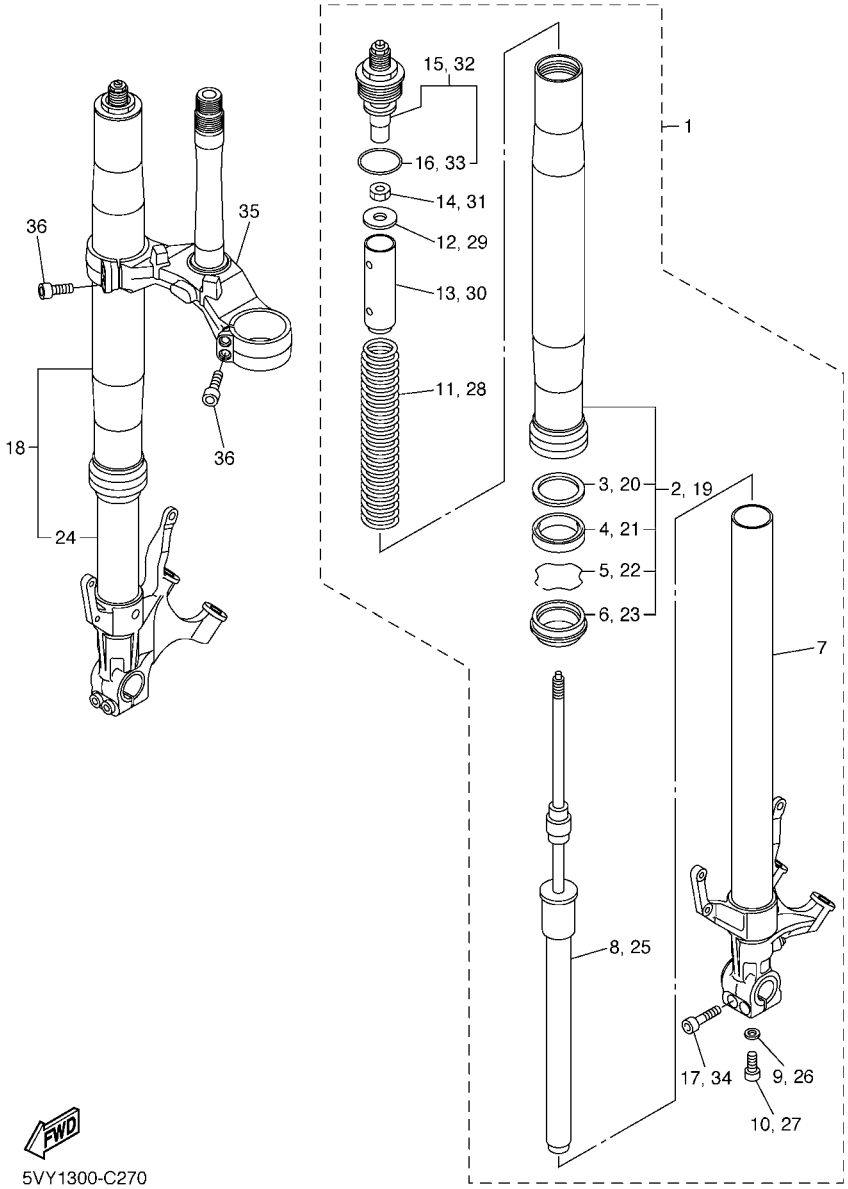

FIG. 27 HORQUILLA DELANTERA

REF. Nº	CODIGO Nº	DESCRIPCION	5VY7					OBSERVACIONES
28	5VY–23141–00	.RESORTE HORQUILLA DELANT.	1					
29	5VY–12277–00	.ARANDELA	1					
30	5VY–23118–00	.SEPARADOR	1					
31	3LC–23357–00	.TUERCA	1					
32	5VY–23111–00	.TAPON	1					
33	3XJ–23147–L0	..ARO	1					
34	91314–08040	.PERNO	2					
35	5VY–23340–00	PLATINA INFERIOR COMPLETA	1					
36	91314–08030	PERNO	4					

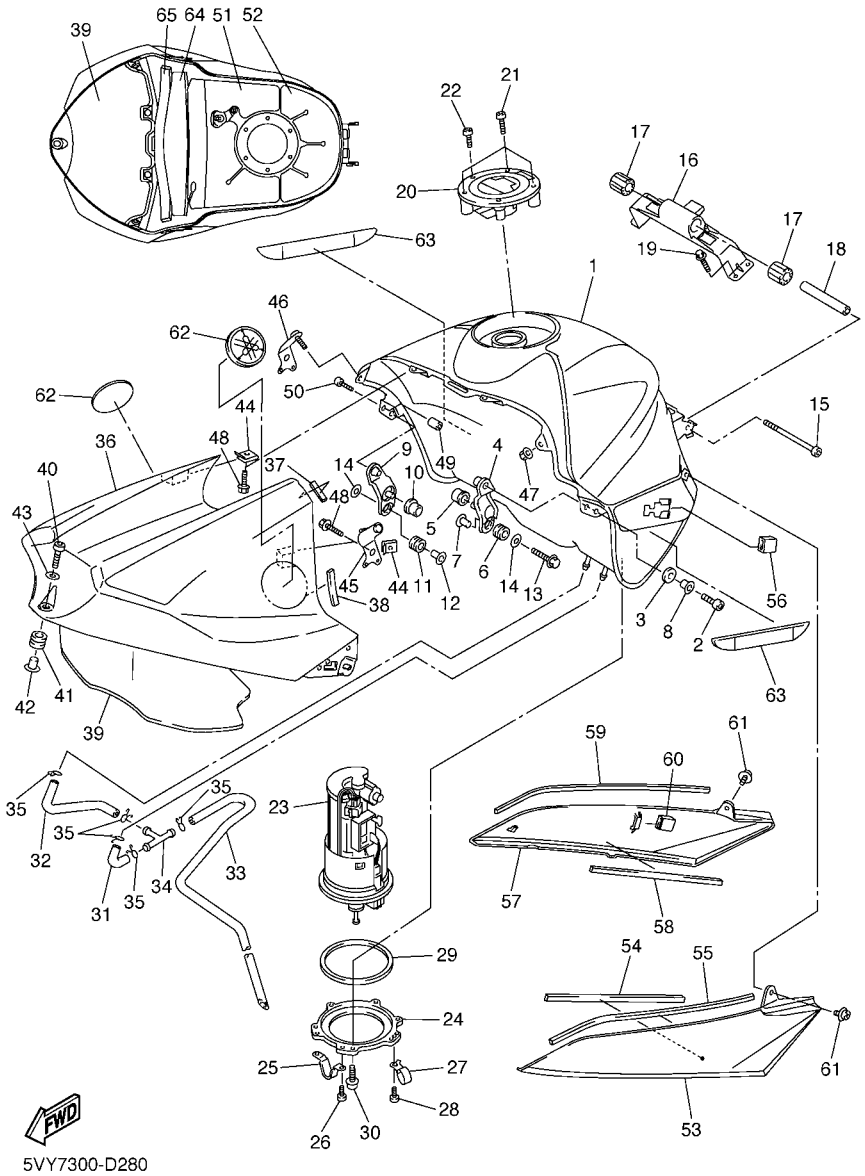

FIG. 28 DEPOSITO DE COMBUSTIBLE

REF. Nº	CODIGO Nº	DESCRIPCION	5VY7					OBSERVACIONES
1	5VY–YK241–30–P0	DEPOSITO DE COMBUSTIBLE COMP.	1					UR DRMK
	5VY–YK241–30–P1	DEPOSITO DE COMBUSTIBLE COMP.	1					UR DPBMC
	5VY–YK241–M0–P2	DEPOSITO DE COMBUSTIBLE COMP.	1					UR BS4
2	91317–06016	PERNO	2					
3	5VY–24183–00	AMORTIGUADOR DE MONTAJE 3	2					
4	5VY–24191–00	SOPORTE DEPOSITO DE COMBUST.1	1					
5	5VY–24181–00	AMORTIGUADOR DE MONTAJE 1	1					
6	90480–10542	TAPON	1					
7	90387–066Y6	COLLAR	1					
8	90387–061U9	COLLAR	2					
9	5VY–24192–00	SOPORTE DE DEPOSITO COMBUST.2	1					
10	5VY–24181–00	AMORTIGUADOR DE MONTAJE 1	1					
11	90480–10542	TAPON	1					
12	90387–066Y6	COLLAR	1					
13	95027–06030	PERNO, DE BRIDA	2					
14	90201–06063	ARANDELA PLANA	2					
15	91317–06090	PERNO	1					
16	5VY–2413Y–00	SOPORTE ACCESORIO DE DEPOSITO	1					
17	5SL–24183–00	AMORTIGUADOR DE MONTAJE 3	2					
18	90387–06055	COLLAR	1					
19	95027–06020	PERNO, DE BRIDA	4					
20	5JJ–24602–00	TAPON COMPLETO	1					
21	90110–05112	TORNILLO ALLEN	3					
22	91317–05010	PERNO	1					
23	5PW–13907–01	BOMBA DE COMBUSTIBLE COMPLETA	1					
24	5VY–24491–00	SOPORTE BOMBA COMBUSTIBLE	1					
25	5PW–24192–00	SOPORTE DE DEPOSITO COMBUST.2	1					

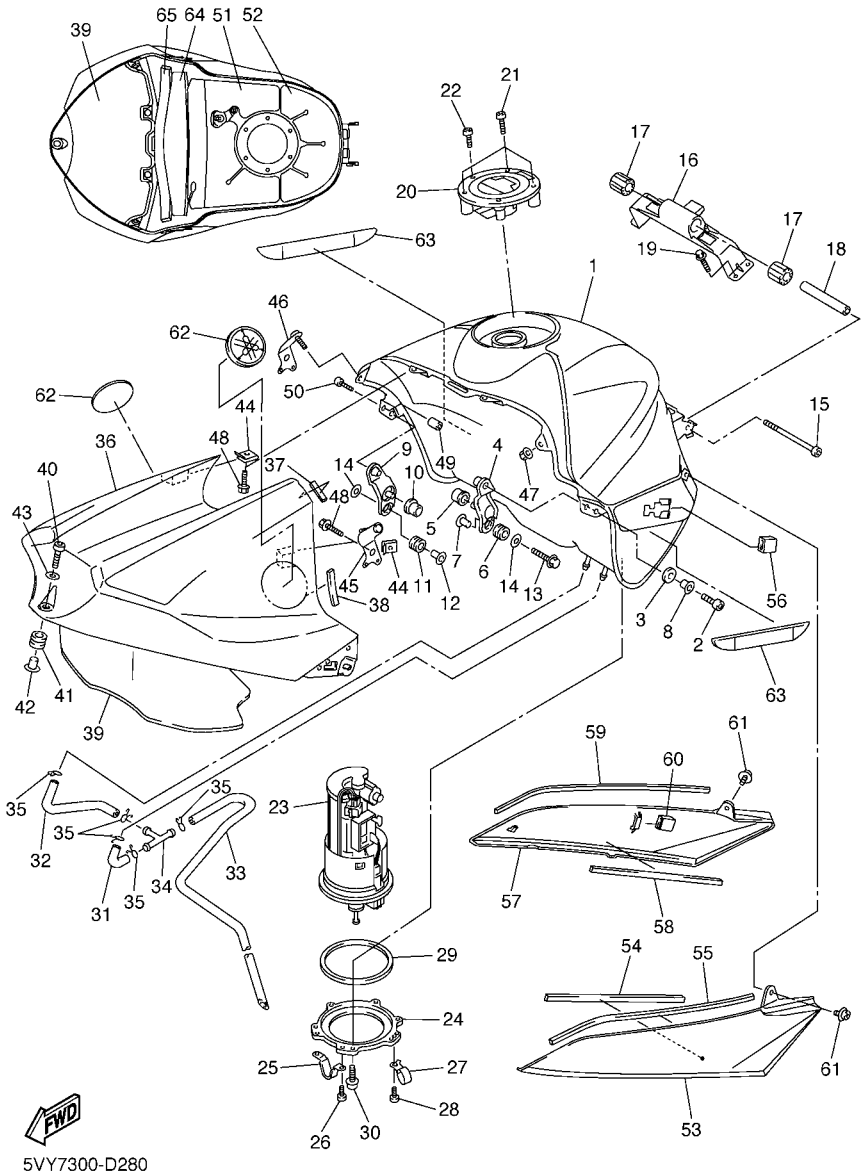

FIG. 28 DEPOSITO DE COMBUSTIBLE

REF. Nº	CODIGO Nº	DESCRIPCION	5VY7					OBSERVACIONES
26	98907–05008	TORNILLO DE LIGAR	2					
27	90461–10010	GRAPA	1					
28	90154–05012	TORNILLO DE LIGAR	1					
29	5JW–24486–00	ANILLO O	1					
30	90110–05014	TORNILLO ALLEN	6					
31	5VY–24315–00	TUBO DE DESAGUE	1					
32	5VY–24316–00	TUBO 6	1					
33	5VY–24317–00	TUBO 7	1					
34	90413–07007	UNION	1					
35	90467–09006	PRESILLA	5					
36	5VY–2171A–01–P0	CUBIERTA, TECHO	1					UR DRMK
	5VY–2171A–01–P1	CUBIERTA, TECHO	1					UR DPBMC
	5VY–2171A–01–P3	CUBIERTA, TECHO	1					UR BS4
37	5VY–2414J–00	EQUILIBRIO, CUBIERTA	2					
38	4XV–2834E–00	AMORTIGUADOR 1	2					
39	5VY–24145–00	AMORTIGUADOR CUBIERTA LATERAL	1					
40	91314–06025	PERNO	1					
41	90480–12314	TAPON	1					
42	90387–065J6	COLLAR	1					
43	90201–06M30	ARANDELA PLANA	1					
44	90183–05074	TUERCA DE RESORTE	4					
45	5VY–24117–00	SOPORTE TANQUE COMBUSTIBLE 3	1					
46	5VY–24118–00	SOPORTE TANQUE COMBUSTIBLE 4	1					
47	95707–05500	TUERCA DE BRIDA	2					
48	90105–05002	TORNILLO	4					
49	90179–05523	TUERCA	2					
50	98907–05014	TORNILLO DE LIGAR	2					

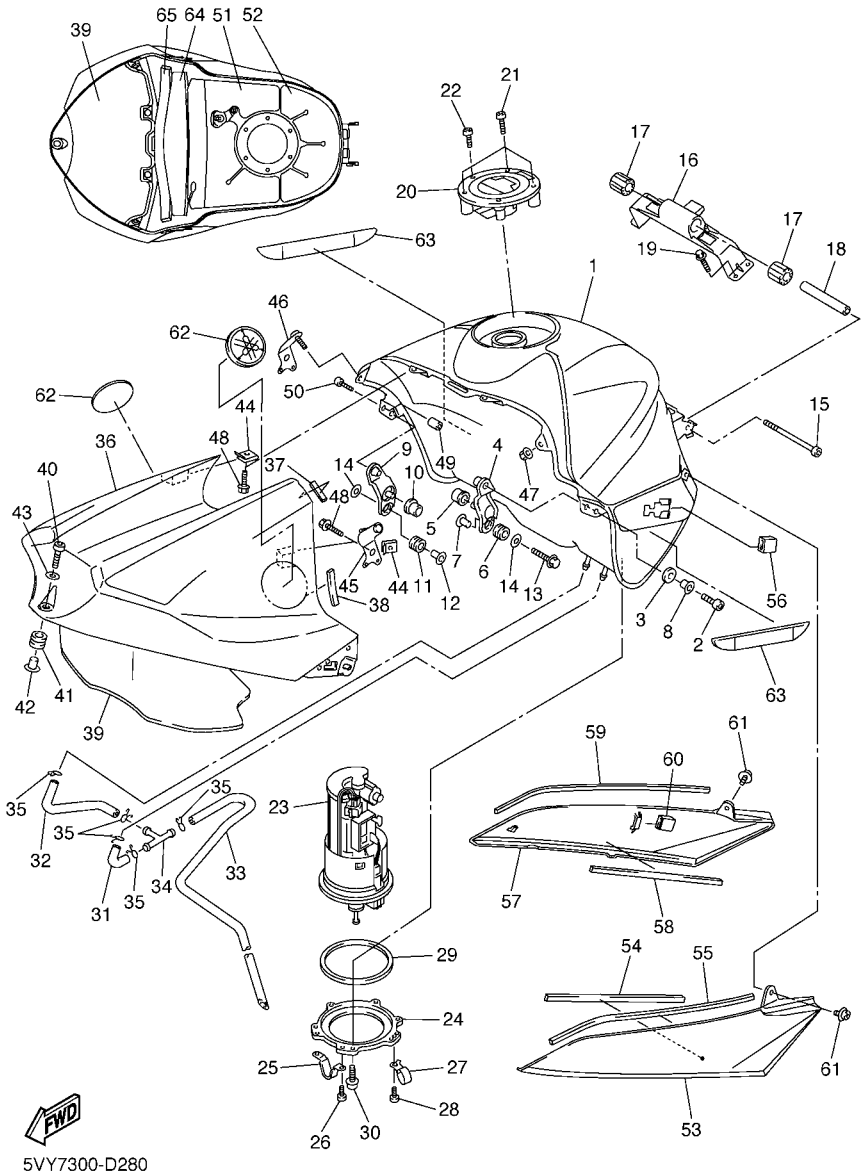

FIG. 28 DEPOSITO DE COMBUSTIBLE

REF. Nº	CODIGO Nº	DESCRIPCION	5VY7					OBSERVACIONES
51	5VY–2414N–00	EQUILIBRIO, CUBIERTA	1					
52	5VY–2414P–00	EQUILIBRIO, CUBIERTA	1					
53	5VY–24129–01	CUBIERTA LATERAL 1	1					
54	5PW–2414J–00	EQUILIBRIO, CUBIERTA	1					
55	5PW–2414H–00	EQUILIBRIO, CUBIERTA	1					
56	5PW–2411J–01	AMORTIGUADOR, DE CUBIERTA LAT	1					
57	5VY–24139–01	CUBIERTA LATERAL 2	1					
58	5PW–2414J–00	EQUILIBRIO, CUBIERTA	1					
59	5PW–2414H–00	EQUILIBRIO, CUBIERTA	1					
60	5PW–2411J–01	AMORTIGUADOR, DE CUBIERTA LAT	1					
61	90159–05015	TORNILLO CON VALONA	2					
62	5PW–2413B–00	EMBLEMA	2					
63	5VY–2414K–00	EQUILIBRIO, CUBIERTA 3	2					
64	5VY–2414R–00	EQUILIBRIO, CUBIERTA	1					
65	5VY–2414H–00	EQUILIBRIO, CUBIERTA	1					

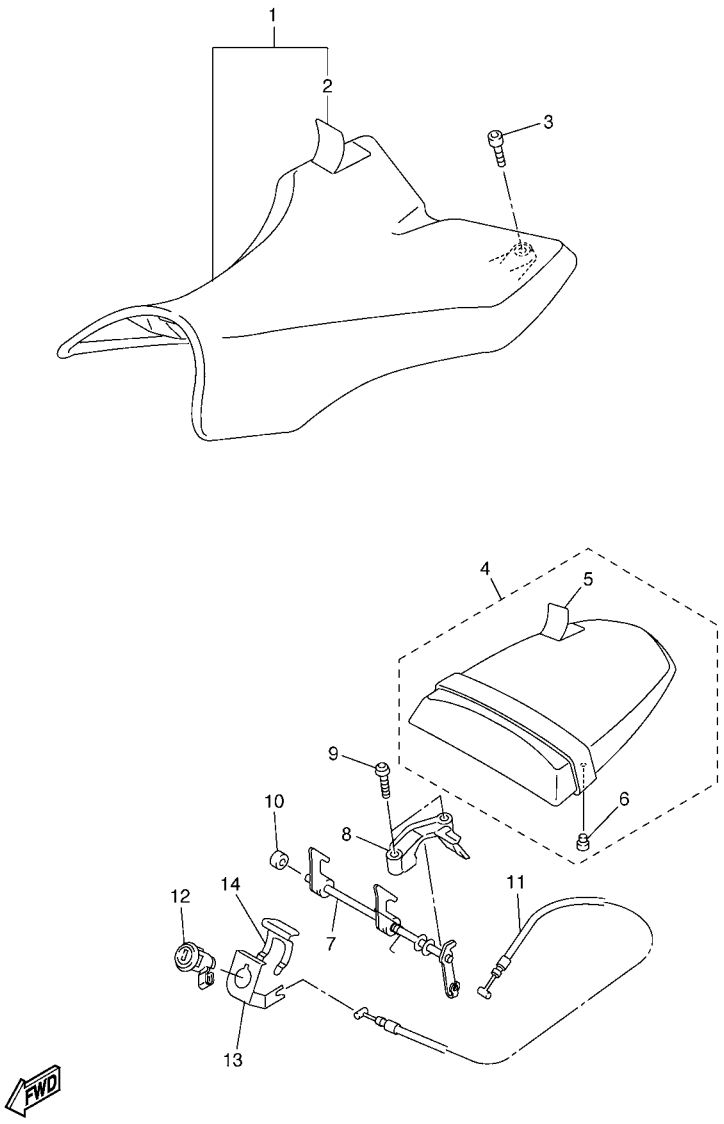

FIG. 29 ASIENTO

REF. Nº	CODIGO Nº	DESCRIPCION	5VY7					OBSERVACIONES
1	5VY–24710–00	ASIENTO SIMPLE COMPLETO	1					
2	5VY–2470F–00	.FUNDADE SILLIN	1					
3	90110–06258	TORNILLO ALLEN	2					
4	5VY–24750–00	ASIENTO TANDEM COMPLETO	1					
5	5VY–24751–00	.CUBIERTA DE ASIENTO TANDEM	1					
6	5SL–24723–00	.AMORTIGUADOR DE ASIENTO	2					
7	5VY–24780–00	TORNILLO CONTROL DE AIRE	1					
8	5VY–24792–00	PLACA	1					
9	92017–06025	PERNO	2					
10	5VY–24729–00	ESPACIADOR 2	1					
11	5VY–2478E–00	CABLE	1					
12	5VY–W2470–00	ASIENTO DE CIERRE COMPLETO	1					
13	5VY–2117K–01	SOPORTE DE CERRADURA	1					
14	5VY–2176V–00	RESORTE, CERRADURA 2	1					

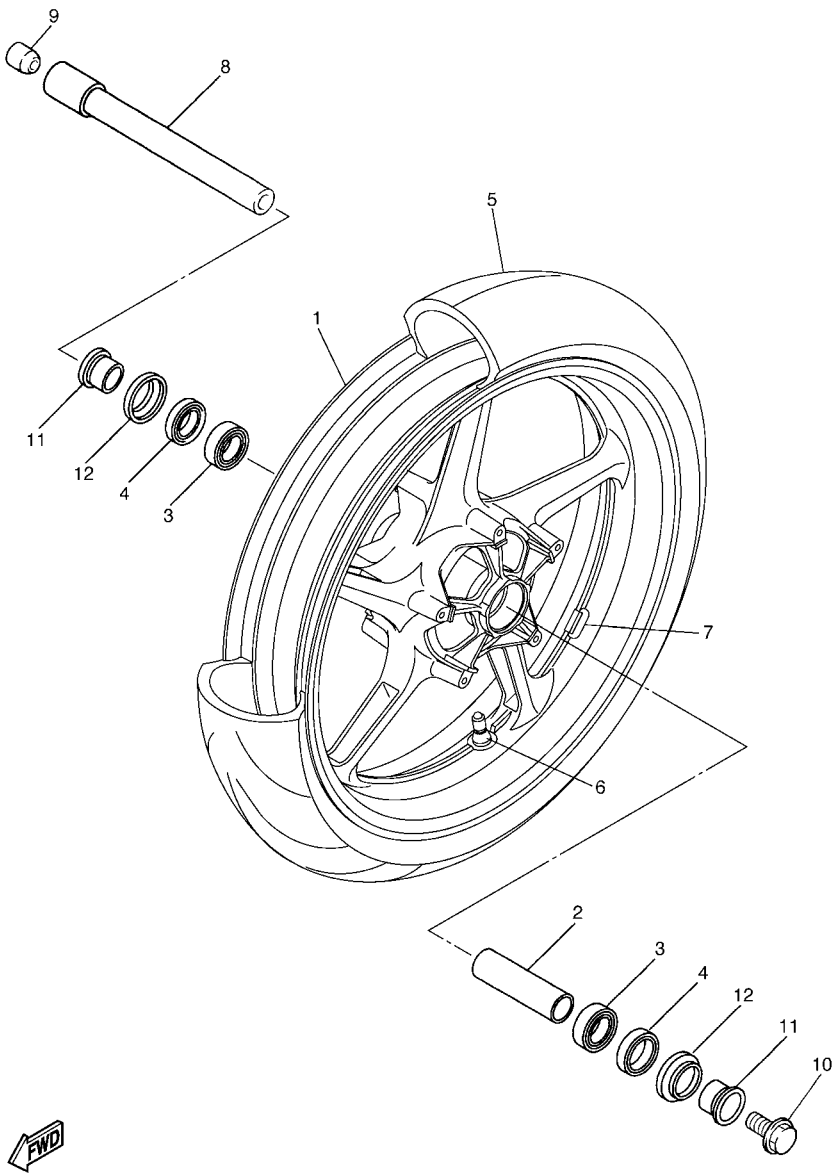

5VY1332-C300

FIG. 30 RUEDA DELANTERA

REF. Nº	CODIGO Nº	DESCRIPCION	5VY7					OBSERVACIONES
1	5VY–25168–00–98	RUEDA FUNDIDA DELANTERA	1					PARA DRMK,DPBMC
	5VY–25168–00–P0	RUEDA FUNDIDA DELANTERA	1					PARA BS4
2	4XV–25117–00	ESPACIADOR DE COJINETE	1					
3	93306–00420	COJINETE	2					
4	93106–28043	SELLO ACEITE	2					
5	*	NEUMATICO(120/70 ZR17M/C 58W)	1					LM MICHELIN
6	93900–00030	VALVULA DE ARO (TR412)	1					TAIHEIYO
7	5MT–25398–00	BALANCEADOR DE RUEDA (10G)	1					UN
	5MT–25398–10	BALANCEADOR DE RUEDA (20G)	1					UN
	5MT–25398–20	BALANCEADOR DE RUEDA (30G)	1					UN
8	5PW–25181–00	EJE DE LA RUEDA	1					
9	5PW–25188–00	TAPA	1					
10	90105–14002	TORNILLO	1					
11	4XV–25186–00	COLLAR DE RUEDA	2					
12	4XV–25118–00	CUBIERTA DE MASA PARA POLVO	2					

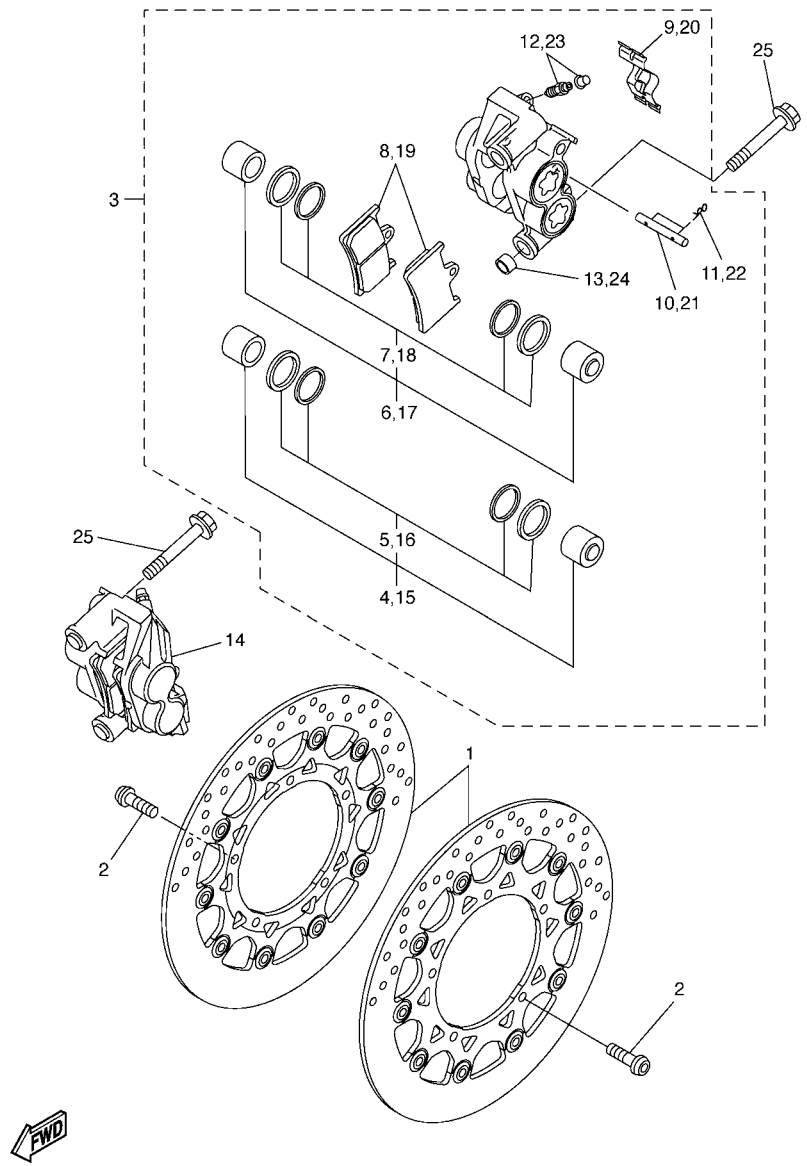

FIG. 31 CALIBRE FRENO DELANTERA

REF. Nº	CODIGO Nº	DESCRIPCION	5VY7					OBSERVACIONES
1	5VY–2581T–00	DISCO DE FRENO	2					
2	90149–06043	TORNILLO DE REGLAJE	10					
3	5VY–2580T–00	CALIBRE COMPLETO (IZQUIERDO)	1					
4	5PW–W0057–00	.PISTON COMPLETO PINZA	1					
5	5PW–W0047–00	..JUEGO DE RETENES DE PINZA	1					
6	5PW–W0057–10	.PISTON COMPLETO PINZA	1					
7	5PW–W0047–10	..JUEGO DE RETENES DE PINZA	1					
8	5VY–W0045–00	.JUEGO DE COJIN DE FRENO	1					
9	4SV–25919–00	.SOPORTE DE PASTILLAS	1					
10	4SV–25924–00	.PASADOR	1					
11	3GM–25925–00	.PRESILLA	2					
12	1J3–W0048–00	.CJTO TORNILLO DE PURGA	1					
13	5VY–2583B–00	.PASADOR DE PERILLA	2					
14	5VY–2580U–00	CALIBRE COMPLETO (DERECO)	1					
15	5PW–W0057–00	.PISTON COMPLETO PINZA	1					
16	5PW–W0047–00	..JUEGO DE RETENES DE PINZA	1					
17	5PW–W0057–10	.PISTON COMPLETO PINZA	1					
18	5PW–W0047–10	..JUEGO DE RETENES DE PINZA	1					
19	5VY–W0045–00	.JUEGO DE COJIN DE FRENO	1					
20	4SV–25919–00	.SOPORTE DE PASTILLAS	1					
21	4SV–25924–00	.PASADOR	1					
22	3GM–25925–00	.PRESILLA	2					
23	1J3–W0048–00	.CJTO TORNILLO DE PURGA	1					
24	5VY–2583B–00	.PASADOR DE PERILLA	2					
25	90401–10012	PERNO DE UNION	4					

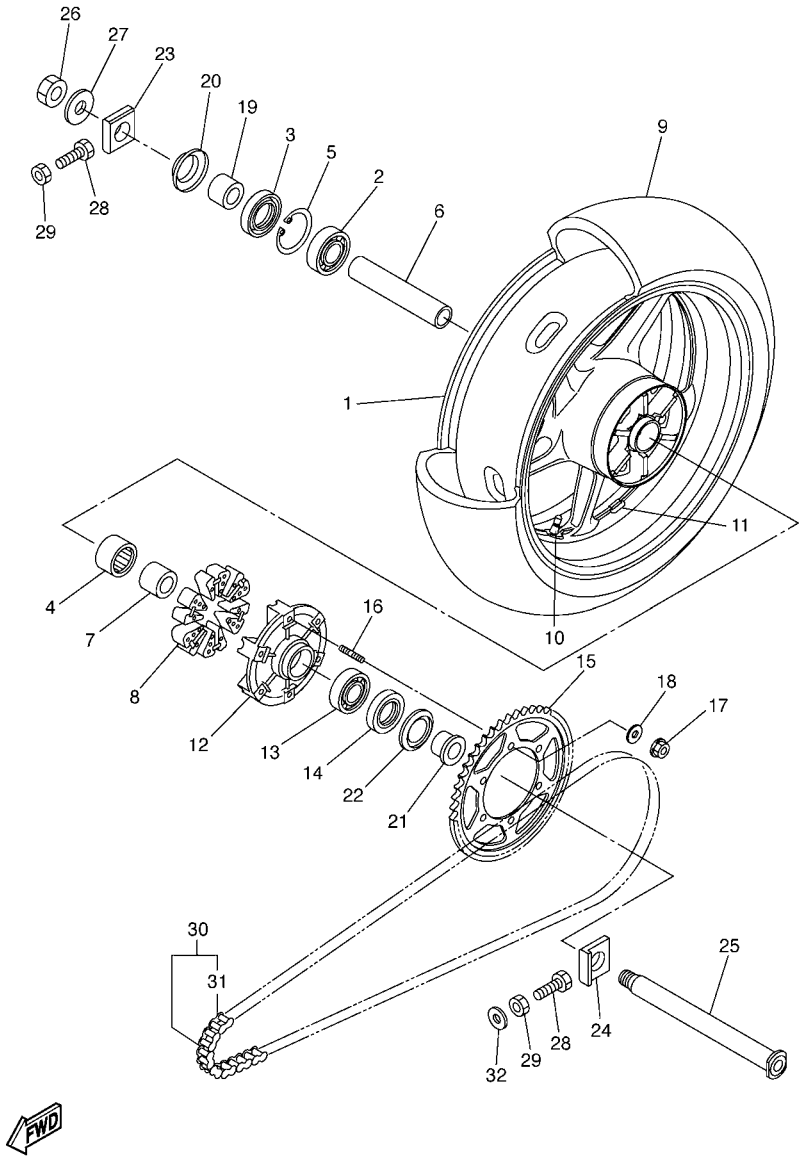

FIG. 32 RUEDA TRASERA

REF. Nº	CODIGO Nº	DESCRIPCION	5VY7					OBSERVACIONES
1	5VY–25338–00–98	RUEDA FUNDIDA TRASERA	1					PARA DRMK,DPBMC
	5VY–25338–00–P0	RUEDA FUNDIDA TRASERA	1					PARA BS4
2	93306–20531	COJINETE	1					
3	93106–40013	SELLO ACEITE	1					
4	93317–43580	COJINETE	1					
5	93420–61M07	SEGURO	1					
6	5PW–25317–00	ESPACIADOR DE COJINETE	1					
7	4XV–25383–00	COLLAR DE RUEDA	1					
8	5VX–25364–00	AMORTIGUADOR	6					
9	*	NEUMATICO(190/50 ZR17M/C 73W)	1					LM MICHELIN
10	93900–00030	VALVULA DE ARO (TR412)	1					TAIHEIYO
11	5MT–25398–00	BALANCEADOR DE RUEDA (10G)	1					UN
	5MT–25398–10	BALANCEADOR DE RUEDA (20G)	1					UN
	5MT–25398–20	BALANCEADOR DE RUEDA (30G)	1					UN
12	5SL–25366–00	EMBRAGUE DE MASA	1					
13	93306–20531	COJINETE	1					
14	93106–40013	SELLO ACEITE	1					
15	5VY–25445–20	CORONA (45T)	1					
16	90116–10485	ESPARRAGO	6					
17	90185–10009	TUERCA AUTOBLOCANTE	6					
18	90201–10021	ARANDELA PLANA	6					
19	5PW–25377–00	COLLAR DE RUEDA	1					
20	5PW–25367–00	CUBIERTA DE MASA PARA POLVO	1					
21	5SL–25376–00	COLLAR DE RUEDA	1					
22	5SL–25367–00	CUBIERTA DE MASA PARA POLVO	1					
23	5VY–25388–00	TIRADOR DE CADENA 1	1					
24	5VY–25389–00	TIRADOR DE CADENA 2	1					

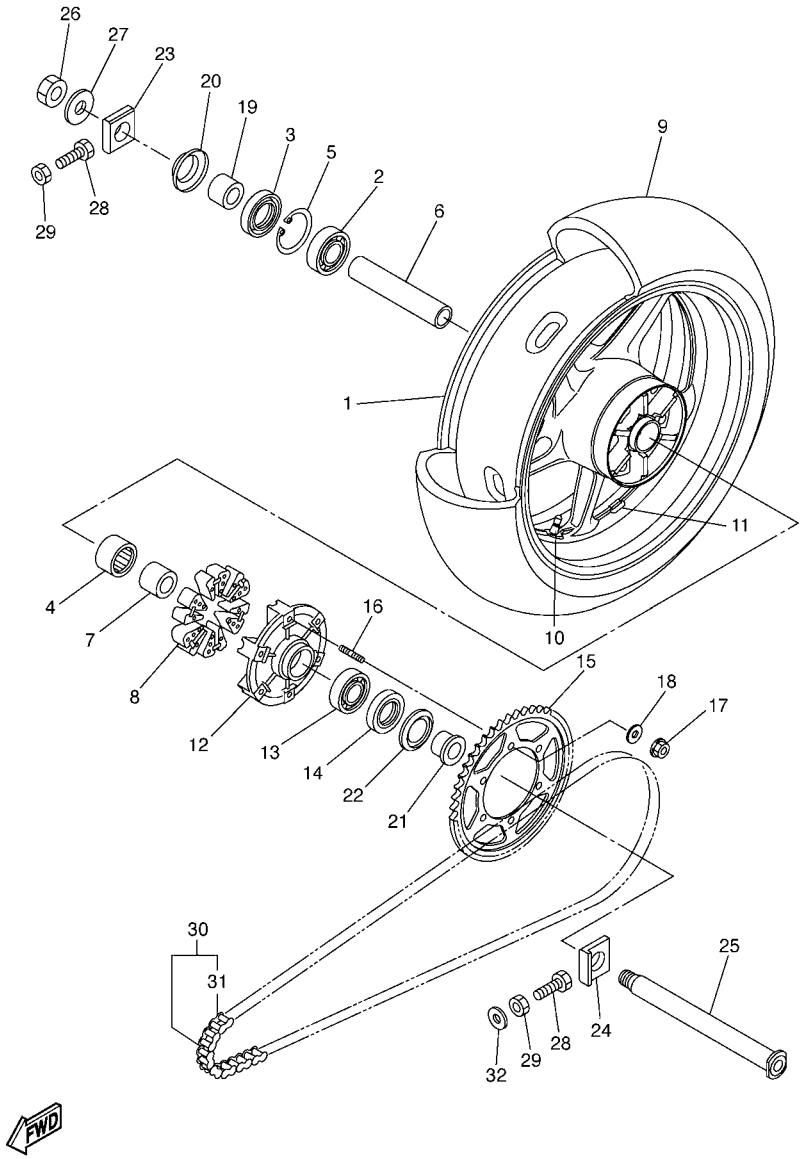

FIG. 32 RUEDA TRASERA

REF. Nº	CODIGO Nº	DESCRIPCION	5VY7					OBSERVACIONES
25	5SL–25381–00	EJE DE RUEDA	1					
26	90185–24165	TUERCA AUTOBLOCANTE	1					
27	90201–257R5	ARANDELA PLANA	1					
28	90101–08766	TORNILLO	2					
29	95307–08600	TUERCA	2					
30	94582–10116	CADENA (DID50VA8-116L)	1					
31	94682–05031	.JUNTA, DE CADENA(DID50VA8-ZJ)	1					
32	90201–086P8	ARANDELA PLANA	2					

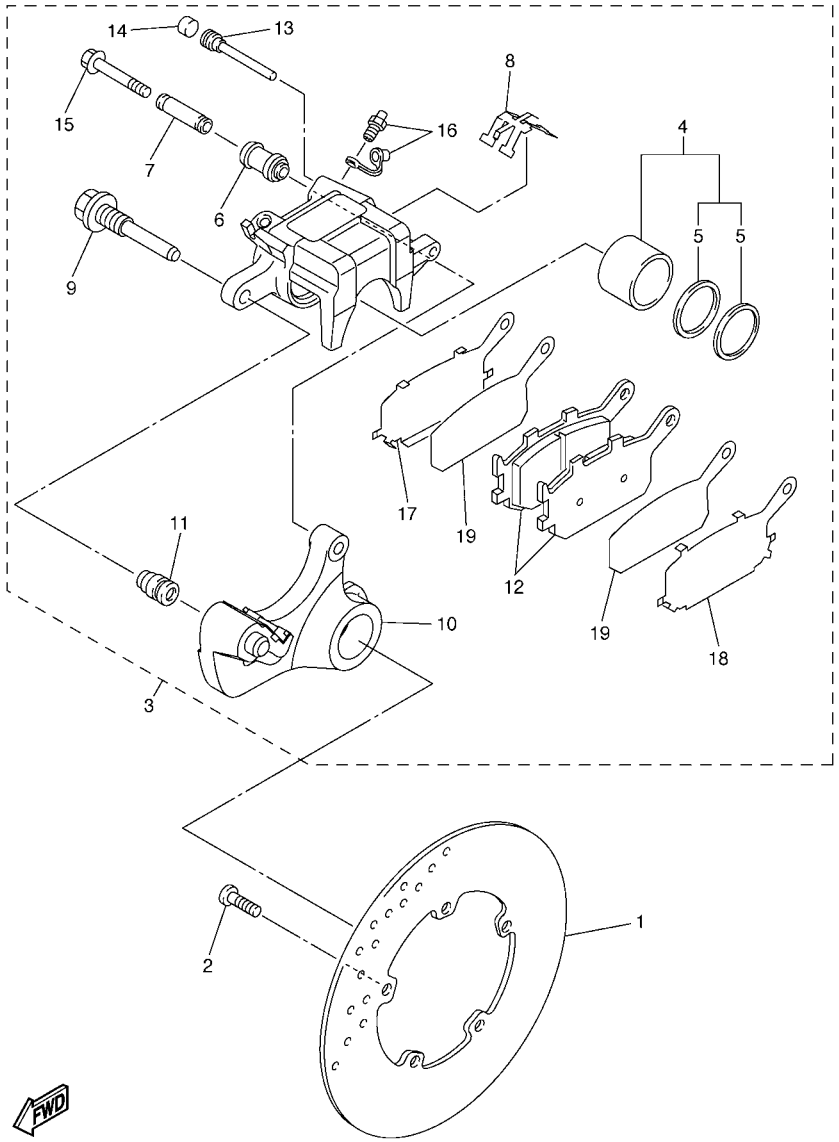

5VY1300-C330

FIG. 33 CALIBRE FRENO TRASERA

REF. Nº	CODIGO Nº	DESCRIPCION	5VY7					OBSERVACIONES
1	5SL–2582W–00	DISCO DE FRENO TRASEROS 2	1					
2	90149–08009	TORNILLO DE REGLAJE	5					
3	5VY–2580W–00	CALIBRE COMPLETO TRASEROS 2	1					
4	5VY–W0057–00	.PISTON COMPLETO PINZA	1					
5	5SL–W0047–00	..JUEGO DE RETENES DE PINZA	1					
6	5SL–25917–00	.FUNDA DE CALIBRE	1					
7	5SL–25838–00	.CASQUILLO DE CALIBRE	1					
8	5SL–25919–00	.SOPORTE DE PASTILLAS	1					
9	5SL–25914–00	.PASADOR	1					
10	5VY–25921–50	.MENSULA DE SOPORTE	1					
11	3JD–25917–00	.FUNDA DE CALIBRE	1					
12	5VX–W0046–00	.JUEGO DE PASTILLAS DE FRENO 2	1					
13	8CR–25924–00	.PASADOR	1					
14	5DH–25916–00	.TAPON	1					
15	5SL–25926–00	.PERNO	1					
16	1UY–W0048–00	.CJTO TORNILLO DE PURGA	1					
17	5SL–25827–00	.CUNA DE CALIBRE	1					
18	5SL–25827–10	.CUNA DE CALIBRE	1					
19	5SL–25828–00	.CUNA DE CALIBRE	2					

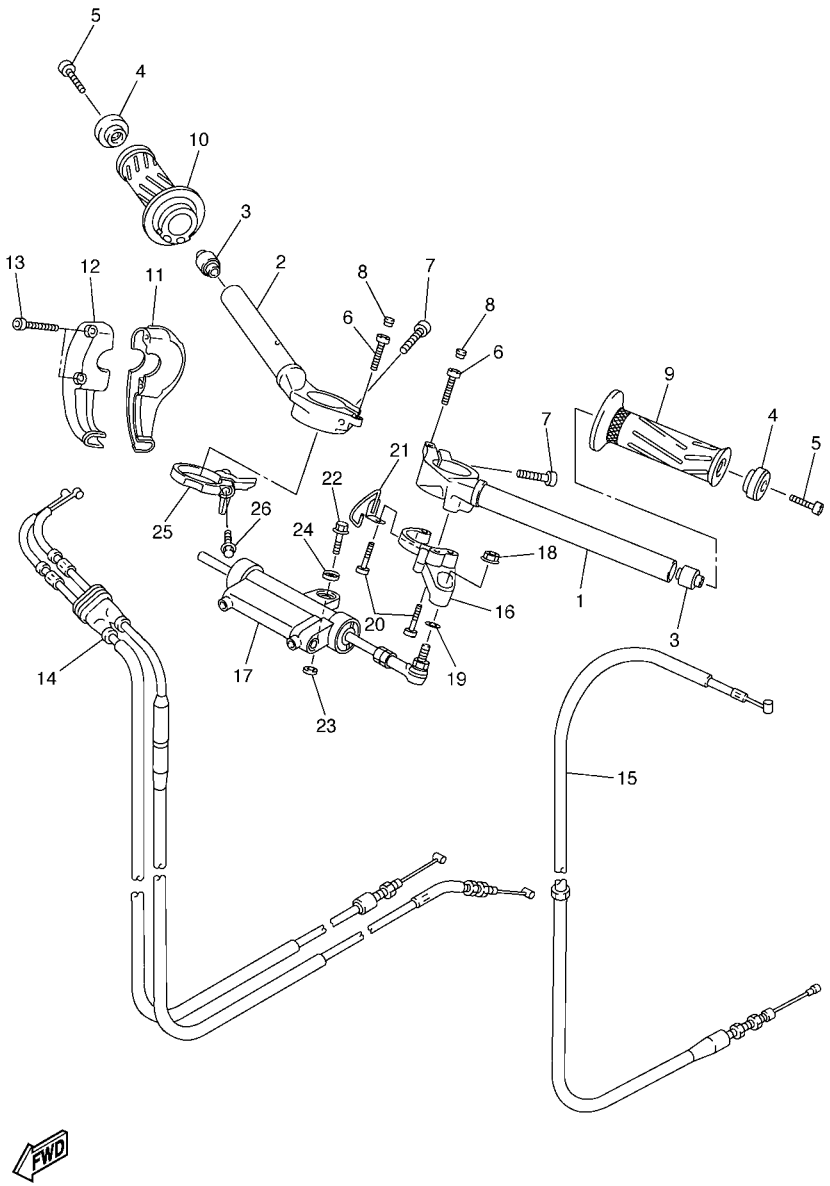

5VY7300-D340

FIG. 34 MANILLAR & CABLE

REF. Nº	CODIGO Nº	DESCRIPCION	5VY7					OBSERVACIONES
1	5VY–26121–00	MANUBRIO (MI)	1					
2	5VY–26122–00	MANUBRIO (MD)	1					
3	4XV–23434–00	SOPORTE DE AMORTIGUADOR	2					
4	5PW–26246–00	EXTREMO DE EMPUNADURA	2					
5	91317–06025	PERNO	2					
6	91317–06025	PERNO	2					
7	91314–08030	PERNO	2					
8	2H9–23469–00	TAPA DE PERNO	2					
9	4YR–26241–02	EMPUNADURA (IZQUIERDO)	1					
10	4YR–26240–02	EMPUNADURA COMPLETA	1					
11	5VY–26281–00	TAPA DE EMPUNADURA SUPERIOR	1					
12	3XW–26282–01	TAPA DE EMPUNADURA INFERIOR	1					
13	90110–05018	TORNILLO ALLEN	2					
14	5VY–26302–01	CABLE DE ACELERADOR COMPLETO	1					
15	5VY–26335–01	CABLE DE EMBRAGUE	1					
16	5VY–23495–00	SOPORTE DE AMORTIGUADOR	1					
17	5VY–23490–00	AMORT. MANUBRIO OSCILANTE	1					
18	95607–08200	TUERCA DE AUTO-CIERRE	1					
19	90201–08M09	ARANDELA PLANA	1					
20	90110–06181	TORNILLO ALLEN	3					
21	5VY–23389–00	GUIA DE CABLE	1					
22	95807–08030	TUERCA DE REBORDE	1					
23	90201–08676	ARANDELA PLANA	1					
24	5VY–26398–00	ARANDELA	1					
25	5VY–2631E–00	WIRE GUIDE	1					
26	90110–05014	TORNILLO ALLEN	1					

FIG. 35 CILINDRO MAESTRO DELANTERO

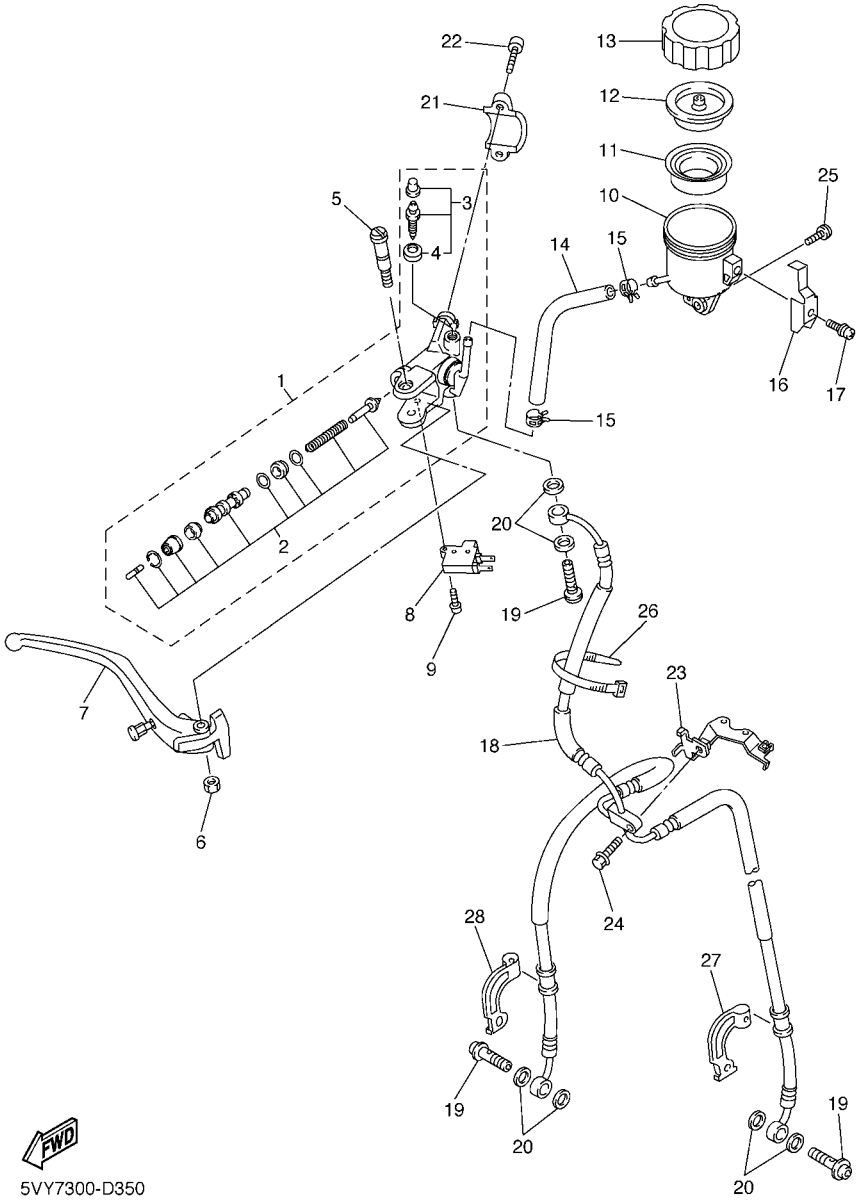

REF. Nº	CODIGO Nº	DESCRIPCION	5VY7					OBSERVACIONES
1	5VY–W2587–10	CILINDRO MAESTRO SUB COMPLET	1					
2	5VY–W0041–00	.JUEGO DE CILINDRO MAESTRO	1					
3	5VY–W0048–00	.CJTO TORNILLO DE PURGA	1					
4	5VY–25975–00	..SELLO 1	1					
5	5VY–2589F–01	PERNO DE PALANCA	1					
6	5VS–2586F–00	TUERCA DE CUBIERTA	1					
7	5VY–83922–00	PALANCA 2	1					
8	4HM–83980–00	INTERRUP.PARADA DELANTERO	1					
9	5VS–2585H–00	TORNILLO	1					
10	5SL–25894–20	TANQUE DE RESERVA	1					
11	5VY–25854–00	DIAFRAGMA TANQUE RESERVA	1					
12	5VY–25855–00	BUJE DE DIAFRAGMA	1					
13	5VY–25852–00	TAPA DE TANQUE DE RESERVA	1					
14	5VY–25895–10	MANGUERA DE TANQUE DE RESERVA	1					
15	90467–120A3	PRESILLA	2					
16	5VY–2589G–00	SOPORTE	1					
17	5VY–2589H–00	TORNILLO	1					
18	5VY–25872–00	MANGUERA DE FRENO 1	1					
19	90401–10172	PERNO DE UNION	3					
20	90201–10118	ARANDELA PLANA	6					
21	5VS–25867–00	SOPORTE DE CILINDRO MAESTRO	1					
22	5VS–26332–00	PERNO	2					
23	5VY–23377–00	SOPORTE DE BOCINA	1					
24	90105–06041	TORNILLO	1					
25	90149–05244	TORNILLO DE REGLAJE	1					
26	3MA–82591–00	BANDA	2					
27	5VY–25875–00	SOPORTE DE MANGUERA FRENO 1	1					

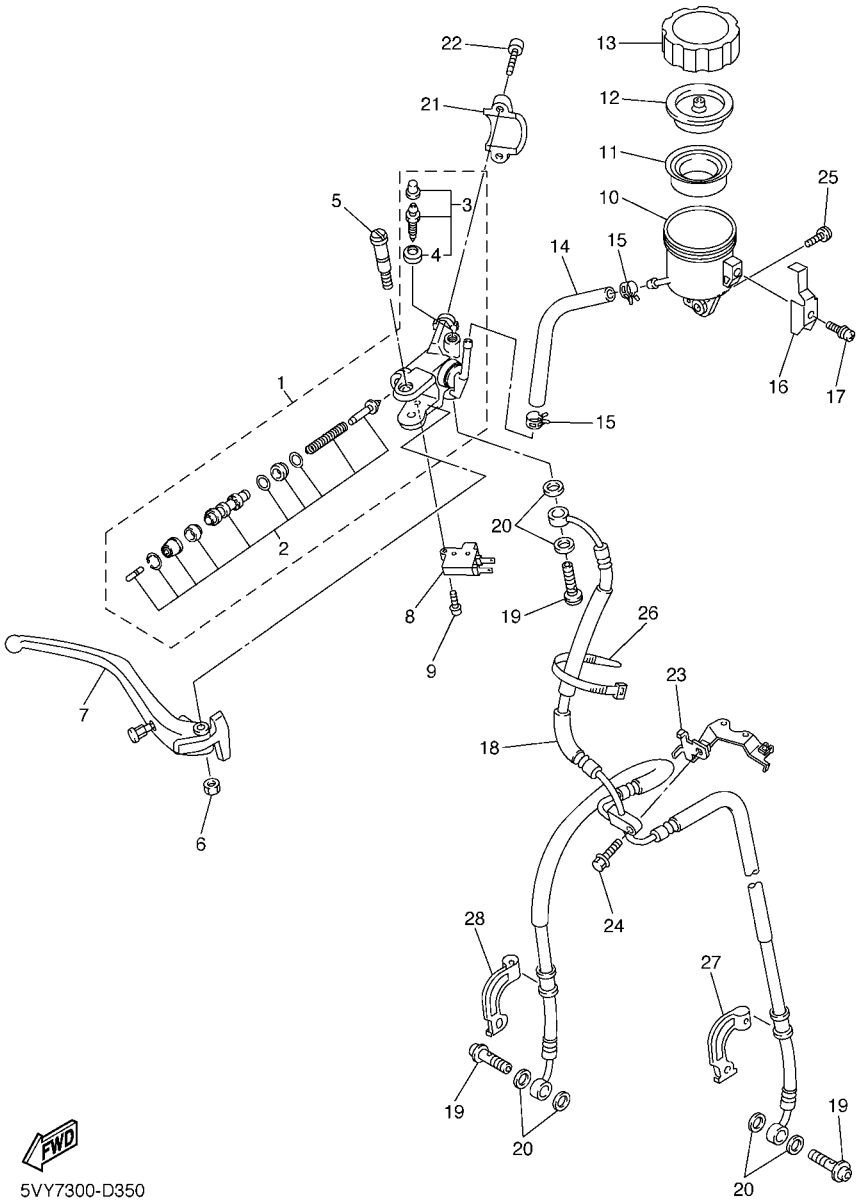

FIG. 35 CILINDRO MAESTRO DELANTERO

REF. Nº	CODIGO Nº	DESCRIPCION	5VY7					OBSERVACIONES
28	5VY–25876–00	SOPORTE DE MANGUERA FRENO 2	1					

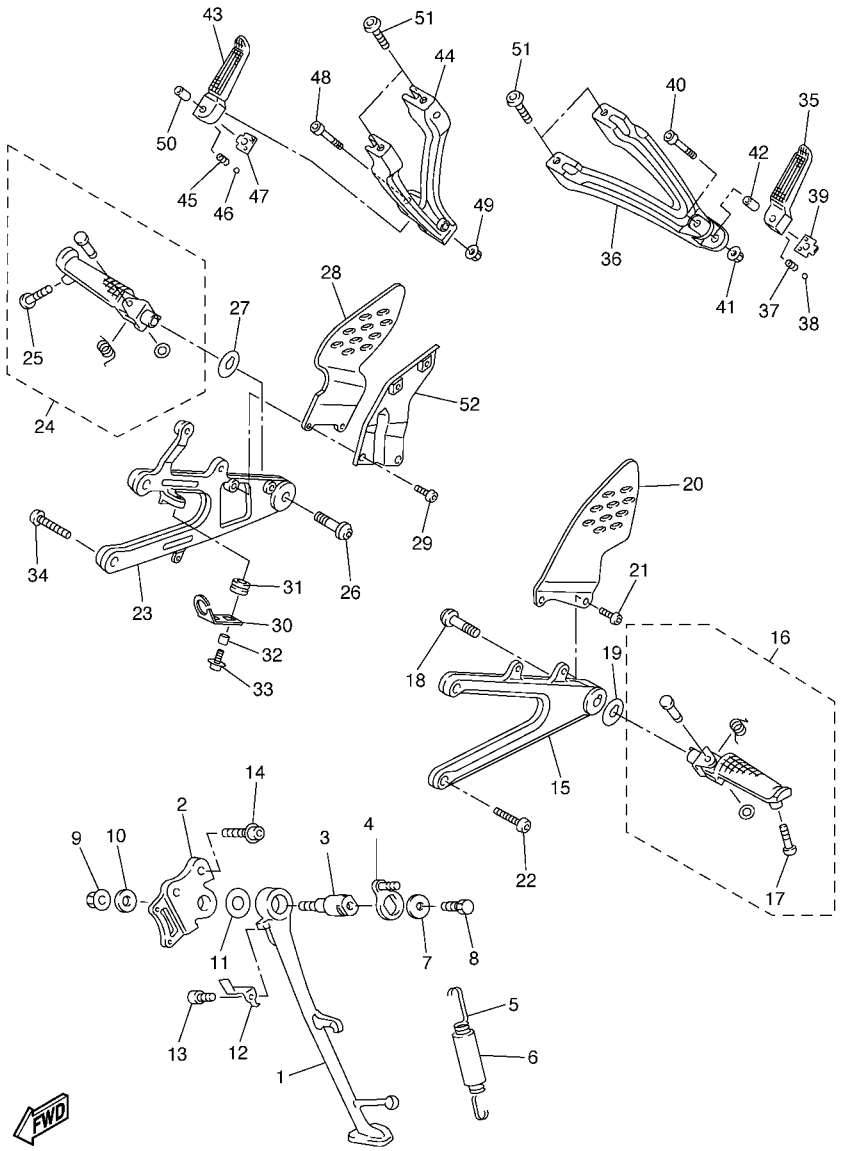

FIG. 36 SOPORTE & APOYAPIE

REF. Nº	CODIGO Nº	DESCRIPCION	5VY7					OBSERVACIONES
1	5VY–27311–00	PUNTAL LATERAL	1					
2	5JJ–27321–00	SOPORTE DE PUNTAL LATERAL	1					
3	4NX–27351–00	GUIA DE PUNTAL LATERAL	1					
4	5PW–27352–00	GANCHO DE PUNTAL LATERAL	1					
5	90506–18008	RESORTE DE TENSION	1					
6	90445–19002	TUBO (L60)	1					
7	90201–081R9	ARANDELA PLANA	1					
8	90101–08662	TORNILLO	1					
9	95607–10200	TUERCA DE AUTO-CIERRE	1					
10	90201–101J1	ARANDELA PLANA	1					
11	90201–146F9	ARANDELA PLANA	1					
12	5JJ–27315–00	CONEXION DE PUNTAL LATERAL	1					
13	91317–06012	PERNO	1					
14	90109–10002	PERNO	2					
15	5VY–27442–01	SOPORTE 2	1					
16	5VY–27410–00	APOYAPIE DELANTERO (MI)	1					
17	90109–083E0	.PERNO	1					
18	90109–103A9	PERNO	1					
19	90214–10002	ARANDELA DE POSICION	1					
20	5VY–27445–00	PLACE 1	1					
21	90111–06003	TORNILLO	2					
22	90109–085G6	PERNO	2					
23	5VY–27443–01	SOPORTE 3	1					
24	5VY–27420–00	APOYAPIE DELANTERO (MD)	1					
25	90109–083E0	.PERNO	1					
26	90109–103A9	PERNO	1					
27	90214–10002	ARANDELA DE POSICION	1					

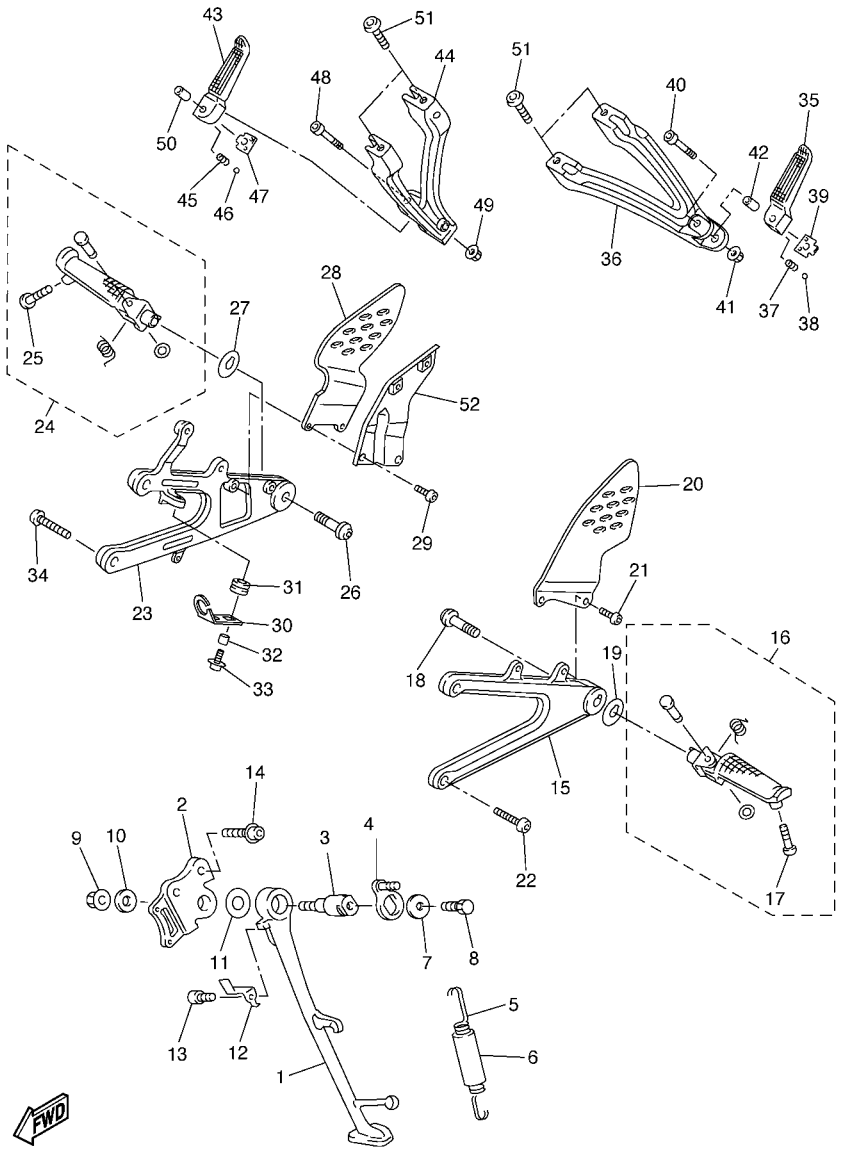

FIG. 36 SOPORTE & APOYAPIE

REF. Nº	CODIGO Nº	DESCRIPCION	5VY7					OBSERVACIONES
28	5VY–27446–00	PLACE 2	1					
29	90149–06304	TORNILLO DE REGLAJE	2					
30	5VY–2144G–00	SOPORTE DE INTERRUPTOR	1					
31	90480–12607	TAPON	1					
32	90387–06023	COLLAR	1					
33	90159–06150	TORNILLO CON VALONA	1					
34	90109–085G6	PERNO	2					
35	5JJ–27431–00	APOYAPIE POSTERIOR 1	1					
36	5VY–2741L–00	MENSULA 4	1					
37	90501–12743	RESORTE DE COMPRESION	1					
38	93501–04011	BOLA	1					
39	5JJ–27437–00	ARANDELA ESPECIAL	1					
40	91314–06035	PERNO	1					
41	95604–06200	TUERCA DE AUTO-CIERRE	1					
42	90387–06697	COLLAR	1					
43	5JJ–27441–00	APOYAPIE POSTERIOR 2	1					
44	5VY–2742L–00	MENSULA 5	1					
45	90501–12743	RESORTE DE COMPRESION	1					
46	93501–04011	BOLA	1					
47	5JJ–27437–00	ARANDELA ESPECIAL	1					
48	91314–06035	PERNO	1					
49	95604–06200	TUERCA DE AUTO-CIERRE	1					
50	90387–06697	COLLAR	1					
51	92017–08020	PERNO	4					
52	5VY–27425–00	SOPORTE DE APOYAPIE 2	1					

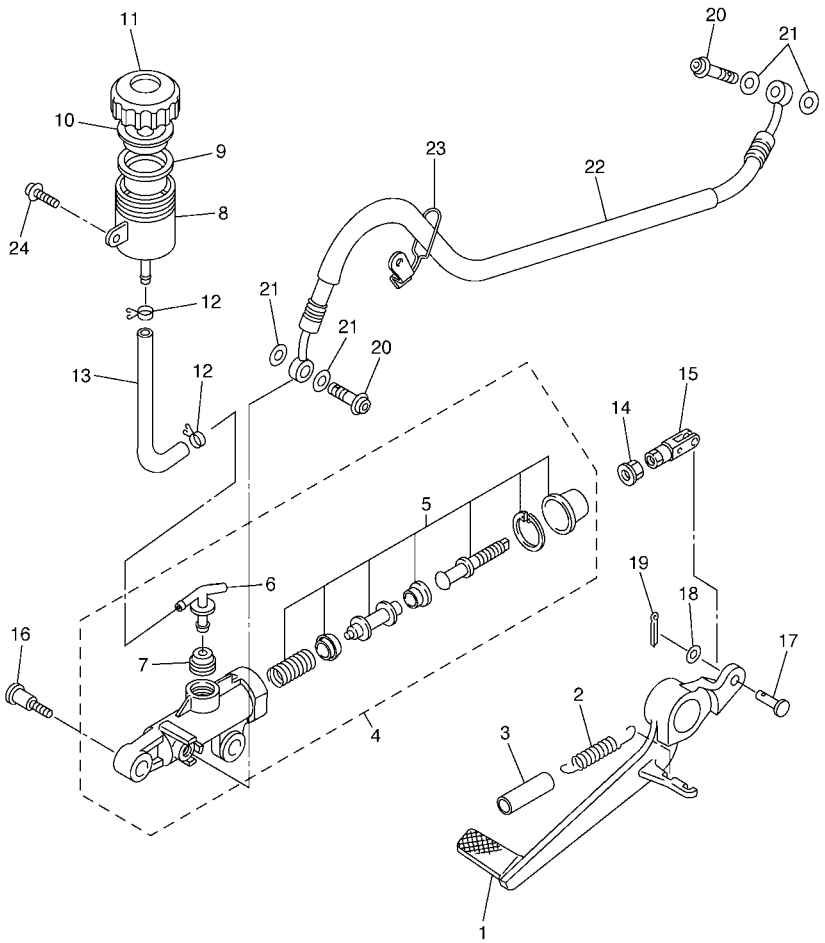

5VY1300-C370

FIG. 37 CILINDRO MAESTRO TRASERO

REF. Nº	CODIGO Nº	DESCRIPCION	5VY7					OBSERVACIONES
1	5VY–27211–00	PEDAL DE FRENO	1					
2	90506–20193	RESORTE DE TENSION	1					
3	90446–15386	TUBO RESEIRADERO	1					
4	5SL–2583V–00	CILINDRO, MAESTRO TRASERO	1					
5	5SL–W0042–50	.JUEGO DE CILINDRO MAESTRO	1					
6	5SL–2582A–00	.CONECTOR	1					
7	4BP–2585F–00	.BUJE	1					
8	5SL–25894–00	TANQUE DE RESERVA	1					
9	5SL–25854–00	DIAFRAGMA TANQUE RESERVA	1					
10	5SL–25855–00	BUJE DE DIAFRAGMA	1					
11	5SL–25852–00	TAPA DE TANQUE DE RESERVA	1					
12	90467–010A0	PRESILLA	2					
13	5VY–25895–00	MANGUERA DE TANQUE DE RESERVA	1					
14	95307–08700	TUERCA	1					
15	5SL–27222–00	UNION	1					
16	90109–06013	PERNO	2					
17	91701–06018	PASADOR DE ABRAZADERA	1					
18	92907–06200	ARANDELA	1					
19	91401–16012	PASADOR DE CHAVETA	1					
20	90401–10172	PERNO DE UNION	2					
21	90201–10118	ARANDELA PLANA	4					
22	5VY–25874–01	MANGUERA DE FRENO	1					
23	5VY–25886–00	SOPORTE DE MANGUERA FRENO	1					
24	90159–06056	TORNILLO CON VALONA	1					

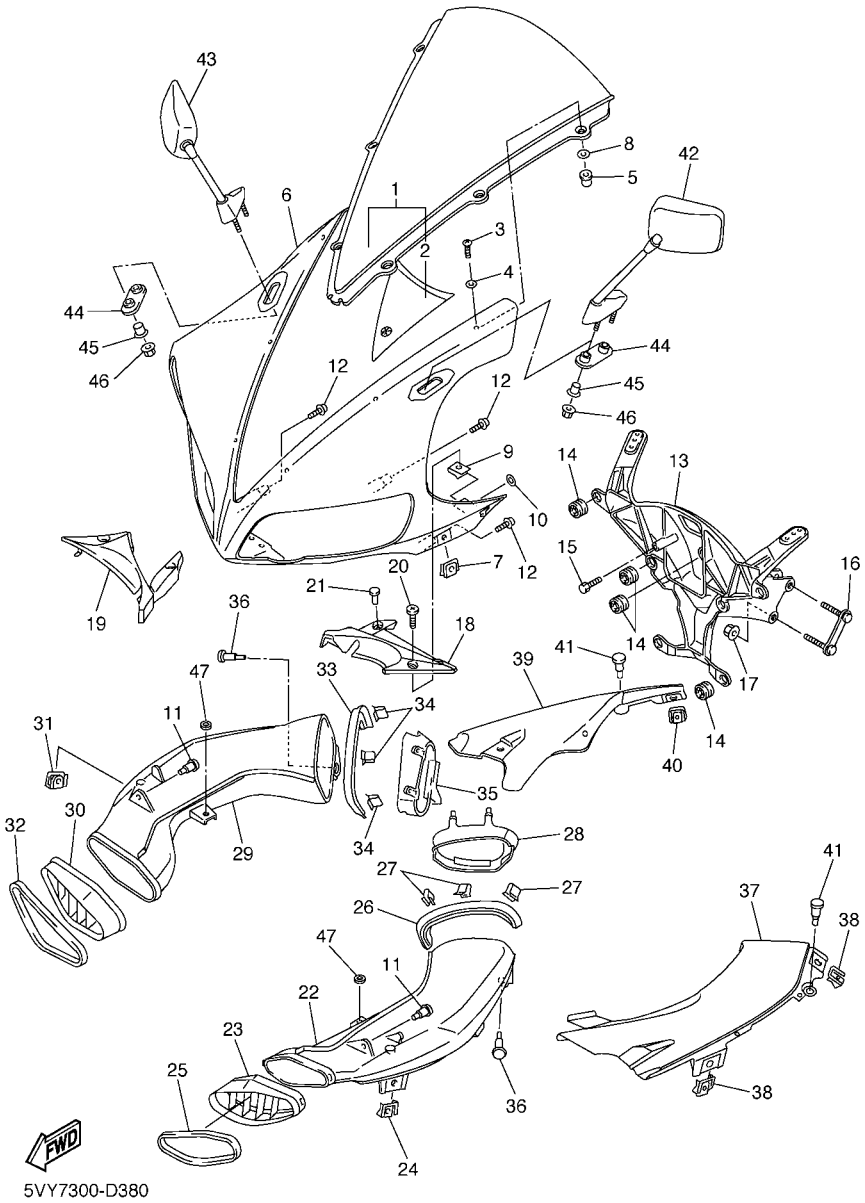

FIG. 38 BOVEDA 1

REF. Nº	CODIGO Nº	DESCRIPCION	5VY7					OBSERVACIONES
1	5VY–Y2881–00	PARABRISA	1					
2	5VY–2832P–00	.CALCOMANIA, DE BOVEDA 18	1					
3	90150–05024	TORNILLO CABEZA REDONDA	6					
4	90202–05123	ARANDELA DE PLANA	6					
5	90179–05523	TUERCA	6					
6	5VY–2835G–00–P0	CARROCERIA, DELANT. SUP. 1	1					UR DRMK
	5VY–2835G–00–P1	CARROCERIA, DELANT. SUP. 1	1					UR DPBMC
	5VY–2835G–00–P3	CARROCERIA, DELANT. SUP. 1	1					UR BS4
7	5PW–2177L–00	PLACA DE RESORTE	2					
8	5JJ–2834W–00	PROTECTOR 2	6					
9	90183–05074	TUERCA DE RESORTE	2					
10	5VY–2834V–00	PROTECTOR 1	2					
11	90269–07007	REMACHE	2					
12	90160–05007	TORNILLO REDONDO ROSCA HEMBRA	5					
13	5VY–28356–00	SOPORTE 1	1					
14	4XV–83513–00	AMORTIGUADOR	9					
15	91317–05012	PERNO	1					
16	4XV–28336–00	PLATO	1					
17	95607–08200	TUERCA DE AUTO-CIERRE	2					
18	5VY–2837L–01	PANEL DE CONSOLA	1					
19	5VY–2837M–01	PANEL, DE CONSOLA 2	1					
20	90154–05013	TORNILLO DE LIGAR	2					
21	90269–06001	REMACHE	2					
22	5VY–2838N–00–P0	CONDUCTO 1	1					PARA DRMK,DPBMC
	5VY–2838N–00–P2	CONDUCTO 1	1					PARA BS4
23	5VY–2837N–00	REJILLA, ADMISION DE AIRE 1	1					
24	5PW–2177L–00	PLACA DE RESORTE	1					

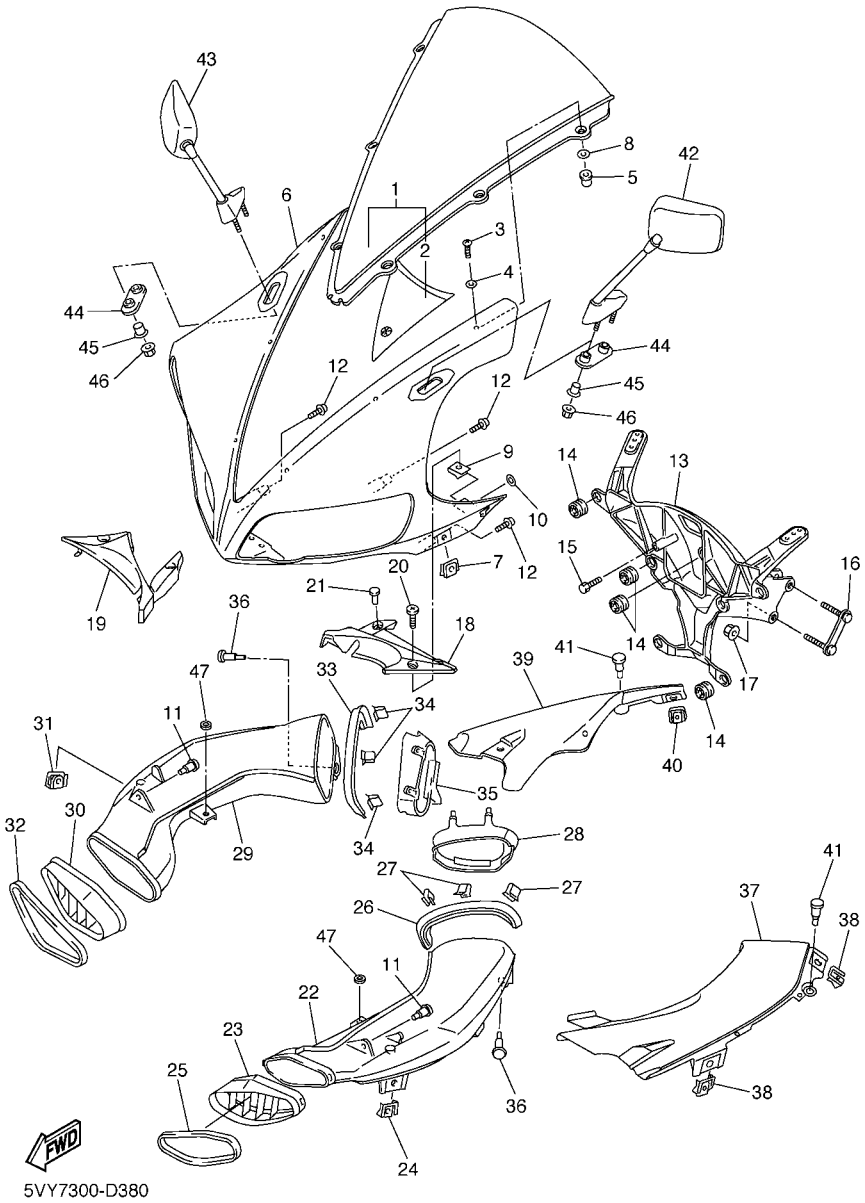

5VY7300-D380

FIG. 38 BOVEDA 1

REF. Nº	CODIGO Nº	DESCRIPCION	5VY7					OBSERVACIONES
25	5VY–28346–00	MOLDURA	1					
26	5VY–2834E–00	AMORTIGUADOR 1	1					
27	1FK–2171H–00	GUIA	3					
28	5VY–28371–00	AMORTIGUADOR	1					
29	5VY–2838R–00–P0	CONDUCTO 2	1					PARA DRMK,DPBMC
	5VY–2838R–00–P2	CONDUCTO 2	1					PARA BS4
30	5VY–2837R–00	REJILLA, ADMISION DE AIRE 2	1					
31	5PW–2177L–00	PLACA DE RESORTE	1					
32	5VY–28346–00	MOLDURA	1					
33	5VY–2834F–00	AMORTIGUADOR	1					
34	1FK–2171H–00	GUIA	3					
35	5VY–28372–00	AMORTIGUADOR	1					
36	90269–07007	REMACHE	2					
37	5VY–2837V–00	REJILLA, SAKIDA DE AIRE 1	1					
38	5PW–2177L–00	PLACA DE RESORTE	2					
39	5VY–2837W–00	REJILLA, SAKIDA DE AIRE 2	1					
40	5PW–2177L–00	PLACA DE RESORTE	2					
41	90269–06081	REMACHE	4					
42	5VY–26280–00	ESPEJO COMPLETO (IZQUIERDO)	1					
43	5VY–26290–00	ESPEJO COMPLETO (DERECHO)	1					
44	5VY–26298–00	PLACA DE ESPEJO 1	2					
45	90387–06372	COLLAR	4					
46	90176–06055	TUERCA CORONA	4					
47	5SL–84753–00	AMORTIGUADOR	2					

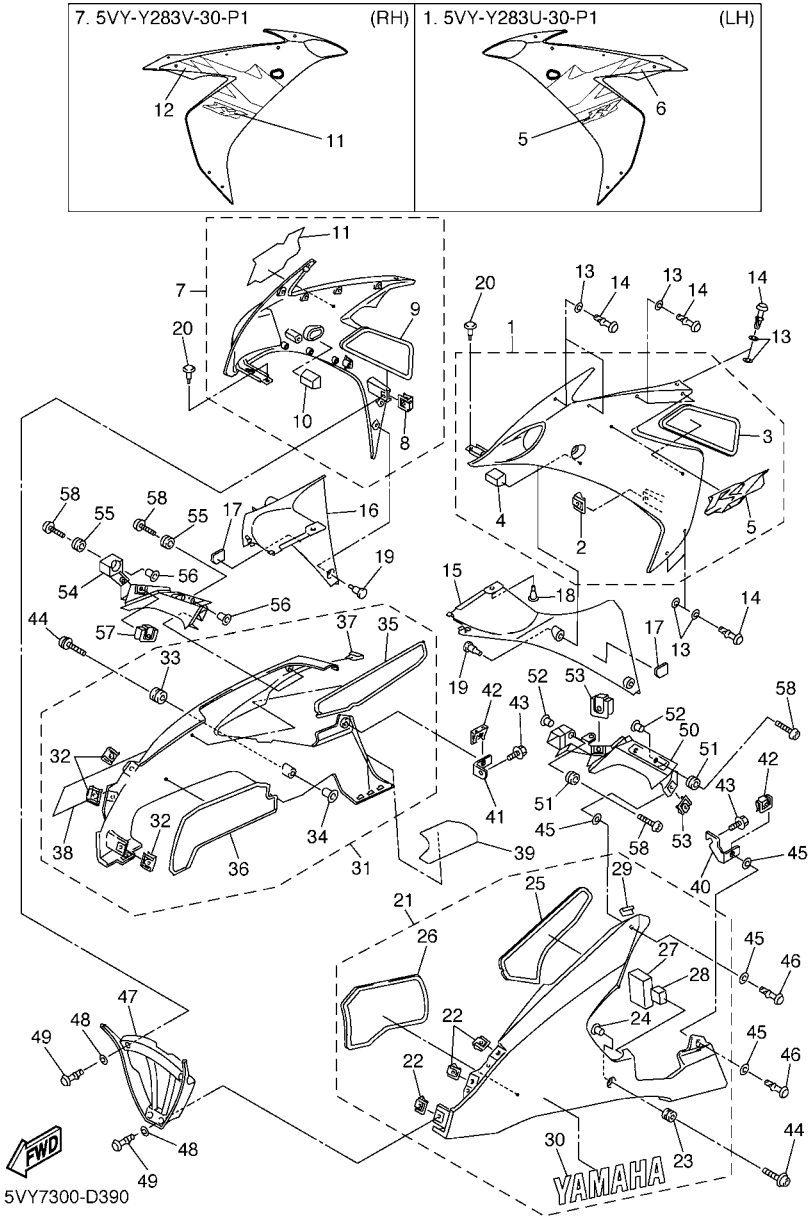

FIG. 39 BOVEDA 2

REF. Nº	CODIGO Nº	DESCRIPCION	5VY7					OBSERVACIONES
1	5VY–Y283U–00–P0	PANEL 1	1					UR DRMK
	5VY–Y283U–30–P1	PANEL 1	1					UR DPBMC
	5VY–Y283U–40–P3	PANEL 1	1					UR MBM3 PARA BS4
2	5PW–2177L–00	.PLACA DE RESORTE	1					
3	5VY–2848H–00	.ASIENTO	1					
4	5VY–28322–00	.SOPORTE 2	1					
5	5VY–2834C–00	.EMBLEMA	1					UR PARA DRMK
	5VY–2836C–10	.EMBLEMA	1					UR PARA DPBMC
	5VY–2834C–20	.EMBLEMA	1					UR PARA BS4
6	5VY–28391–10	.CALCOMANIA DE BOVEDA 1	1					PARA DPBMC
7	5VY–Y283V–00–P0	PANEL 2	1					UR DRMK
	5VY–Y283V–30–P1	PANEL 2	1					UR DPBMC
	5VY–Y283V–40–P3	PANEL 2	1					UR MBM3 PARA BS4
8	5PW–2177L–00	.PLACA DE RESORTE	1					
9	5VY–2848K–00	.ASIENTO 2	1					
10	5VY–28332–00	.SOPORTE PROTECTOR DE PATA	1					
11	5VY–2835C–00	.EMBLEMA 2	1					UR PARA DRMK
	5VY–2837C–10	.EMBLEMA	1					UR PARA DPBMC
	5VY–2835C–20	.EMBLEMA 2	1					UR PARA BS4
12	5VY–28392–10	.CALCOMANIA DE BOVEDA 2	1					PARA DPBMC
13	2TK–21757–00	ARANDELA ESPECIAL 1	20					
14	5PW–28386–00	CABEZA	14					
15	5VY–2836K–00	PANEL 1	1					
16	5VY–2836L–00	PANEL 2	1					
17	5VY–28494–00	GANCHO 3	2					
18	90269–07077	REMACHE	1					
19	90269–06081	REMACHE	4					

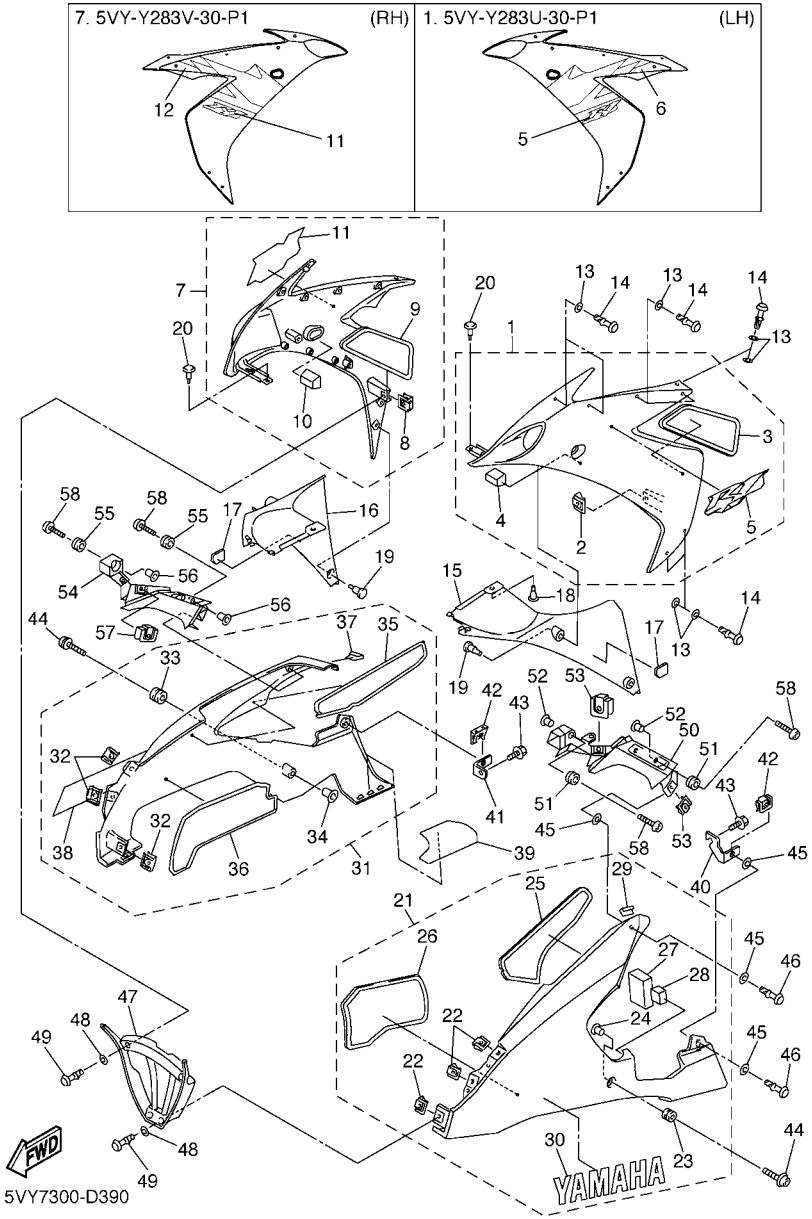

FIG. 39 BOVEDA 2

REF. Nº	CODIGO Nº	DESCRIPCION	5VY7					OBSERVACIONES
20	90269–07077	REMACHE	2					
21	5VY–Y2808–00–P0	CUBIERTA, INFERIOR	1					UR MBL2 PARA DRMK
	5VY–Y2808–20–P1	CUBIERTA, INFERIOR	1					UR DPBMC
	5VY–Y2808–10–P2	CUBIERTA, INFERIOR	1					UR BS4
22	5PW–2177L–00	.PLACA DE RESORTE	3					
23	90480–12596	.TAPON	1					
24	90387–065J6	.COLLAR	1					
25	5VY–2848L–00	.ASIENTO 3	1					
26	5VY–2848N–00	.ASIENTO 5	1					
27	5VY–2837J–00	.AMORTIGUADOR	1					
28	5VY–2837K–00	.AMORTIGUADOR 6	1					
29	5VY–28307–00	.SELLO	1					
30	5JJ–2153E–10	.EMBLEMA, YAMAHA	1					UR PARA DRMK
	5JJ–2153E–00	.EMBLEMA, YAMAHA	1					UR PARA DPBMC
	5JJ–2153E–20	.EMBLEMA, YAMAHA	1					UR PARA BS4
31	5VY–Y2809–00–P0	CUBIERTA, INFERIOR	1					UR MBL2 PARA DRMK
	5VY–Y2809–20–P1	CUBIERTA, INFERIOR	1					UR DPBMC
	5VY–Y2809–10–P2	CUBIERTA, INFERIOR	1					UR BS4
32	5PW–2177L–00	.PLACA DE RESORTE	3					
33	90480–12596	.TAPON	1					
34	90387–065J6	.COLLAR	1					
35	5VY–2848M–00	.ASIENTO4	1					
36	5VY–2848P–00	.ASIENTO 6	1					
37	5VY–28307–00	.SELLO	1					
38	5JJ–2153E–10	.EMBLEMA, YAMAHA	1					UR PARA DRMK
	5JJ–2153E–00	.EMBLEMA, YAMAHA	1					UR PARA DPBMC
	5JJ–2153E–20	.EMBLEMA, YAMAHA	1					UR PARA BS4

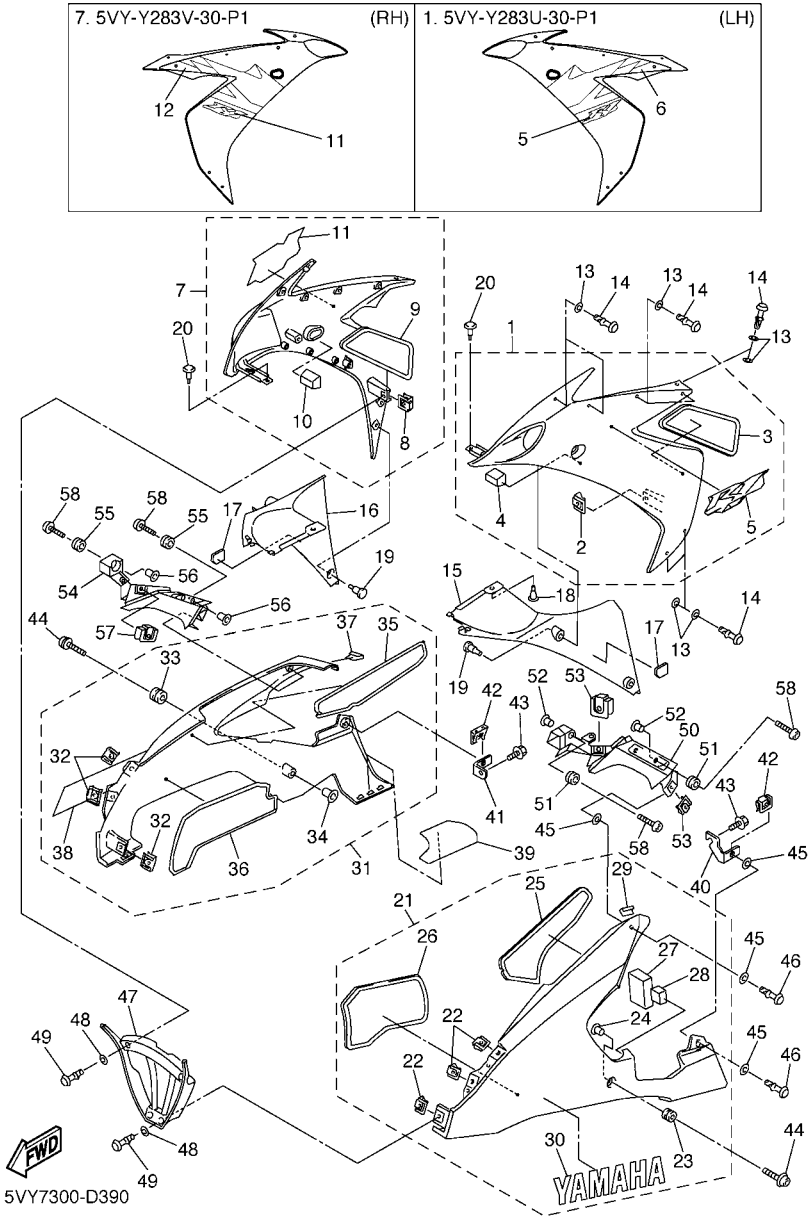

FIG. 39 BOVEDA 2

REF. Nº	CODIGO Nº	DESCRIPCION	5VY7					OBSERVACIONES
39	5VY–2848R–00	ASIENTO 7	1					
40	5VY–2836A–00	SOPORTE 1	1					
41	5VY–2836E–00	SOPORTE 2	1					
42	5PW–2177L–00	PLACA DE RESORTE	2					
43	90109–06056	PERNO	2					
44	90149–06302	TORNILLO DE REGLAJE	2					
45	2TK–21757–00	ARANDELA ESPECIAL 1	8					
46	5PW–28386–00	CABEZA	4					
47	5VY–2836M–00	PANEL 3	1					
48	2TK–21757–00	ARANDELA ESPECIAL 1	4					
49	5PW–28386–00	CABEZA	4					
50	5VY–2117V–00	CUBIERTA 7	1					
51	90480–12596	TAPON	3					
52	90387–065J6	COLLAR	3					
53	5PW–2177L–00	PLACA DE RESORTE	2					
54	5VY–2117W–00	CUBIERTA 8	1					
55	90480–12596	TAPON	3					
56	90387–065J6	COLLAR	3					
57	5PW–2177L–00	PLACA DE RESORTE	2					
58	90111–06030	TORNILLO	6					

FIG. 40 GENERADOR

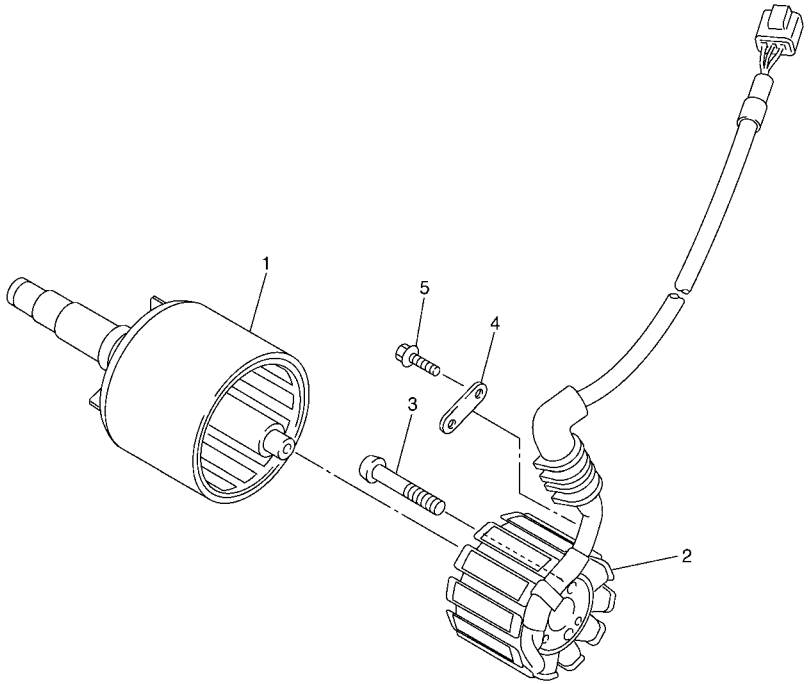

5VY1300-C400

REF. Nº	CODIGO Nº	DESCRIPCION	5VY7					OBSERVACIONES
1	5VY–81450–00	ROTOR COMPLETO	1					
2	5VY–81410–00	ESTATOR COMPLETO	1					
3	90149–06035	TORNILLO DE REGLAJE	3					
4	5VY–15191–00	PLACA	1					
5	90105–06050	TORNILLO	1					

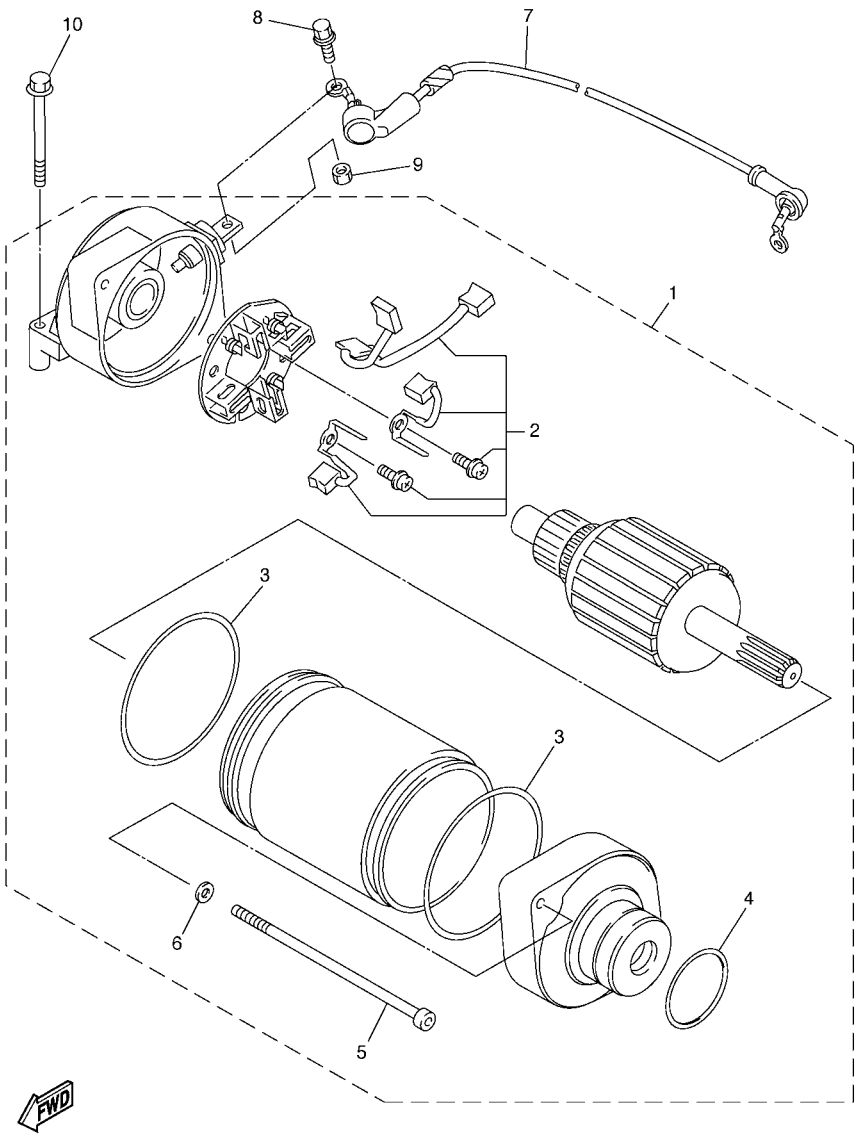

5VY1300-C410

FIG. 41 MOTOR DE ARRANQUE

REF. Nº	CODIGO Nº	DESCRIPCION	5VY7					OBSERVACIONES
1	5VY–81890–00	MOTOR DE ARRANQUE COMPLETO	1					
2	5PW–81801–00	.JUEGO DE ESCOBILLA	1					
3	93210–55669	.ANILLO O	2					
4	93210–25711	.ANILLO O	1					
5	5PW–81846–00	.TORNILLO	2					
6	5PW–8181L–00	.ARANDELA	2					
7	5VY–8183G–00	CABLE COMPL.	1					
8	5PW–81828–00	ARANDELA DE EMPUJE 2	1					
9	95380–05700	TUERCA	1					
10	95027–06040	PERNO, DE BRIDA	2					

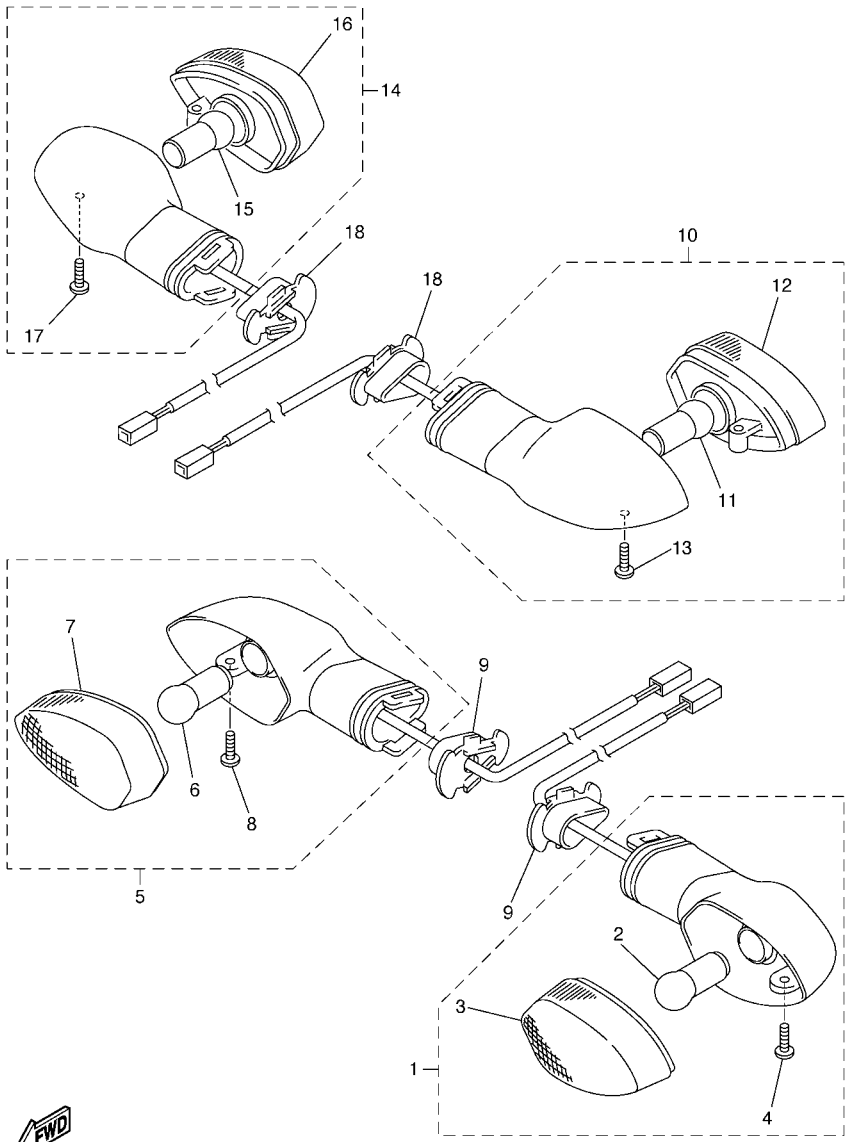

5PW1300-2410

FIG. 42 LUZ DE DESTELLADOR

REF. Nº	CODIGO Nº	DESCRIPCION	5VY7					OBSERVACIONES
1	5PW–83310–01	DESTELLADOR DE LUZ DELANT.	1					
2	1KH–83311–00	.BOMBILLA (12V-10W)	1					
3	5PW–8333A–00	.LENTES COMPLETO	1					
4	97706–04012	.TORNILLO, ROSCA CHAPA	1					
5	5PW–83320–01	DESTELLADOR DE LUZ DELANT.	1					
6	1KH–83311–00	.BOMBILLA (12V-10W)	1					
7	5PW–8334A–00	.LENTES COMPLETO	1					
8	97706–04012	.TORNILLO, ROSCA CHAPA	1					
9	5PW–83318–00	SOPORTE DE DESTELLADOR 1	2					
10	5PW–83330–00	DESTELLADOR DE LUZ TRAS.COMPL.	1					
11	1KH–83311–00	.BOMBILLA (12V-10W)	1					
12	5PW–8334A–00	.LENTES COMPLETO	1					
13	97706–04012	.TORNILLO, ROSCA CHAPA	1					
14	5PW–83340–00	DESTELLADOR DE LUZ TRAS.COMPL.	1					
15	1KH–83311–00	.BOMBILLA (12V-10W)	1					
16	5PW–8333A–00	.LENTES COMPLETO	1					
17	97706–04012	.TORNILLO, ROSCA CHAPA	1					
18	5PW–83318–00	SOPORTE DE DESTELLADOR 1	2					

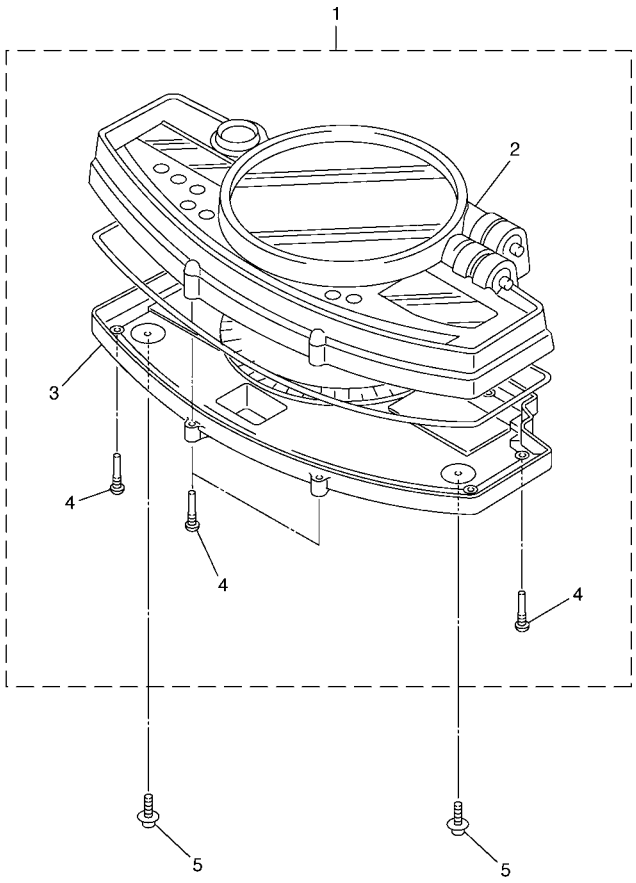

5VY1300-C430

FIG. 43 MEDIDOR

REF. Nº	CODIGO Nº	DESCRIPCION	5VY7					OBSERVACIONES
1	5VY–83500–00	VELOCIMETRO COMPLETO (KM/H)	1					
2	5VY–8353E–00	.CAJA DE MEDIDOR SUPERIOR	1					
3	5VY–83572–00	.CAJA DE VELOCIMETRO INFERIOR	1					
4	5PW–8352S–00	.TORNILLO	11					
5	90160–05006	TORNILLO REDONDO ROSCA HEMBRA	3					

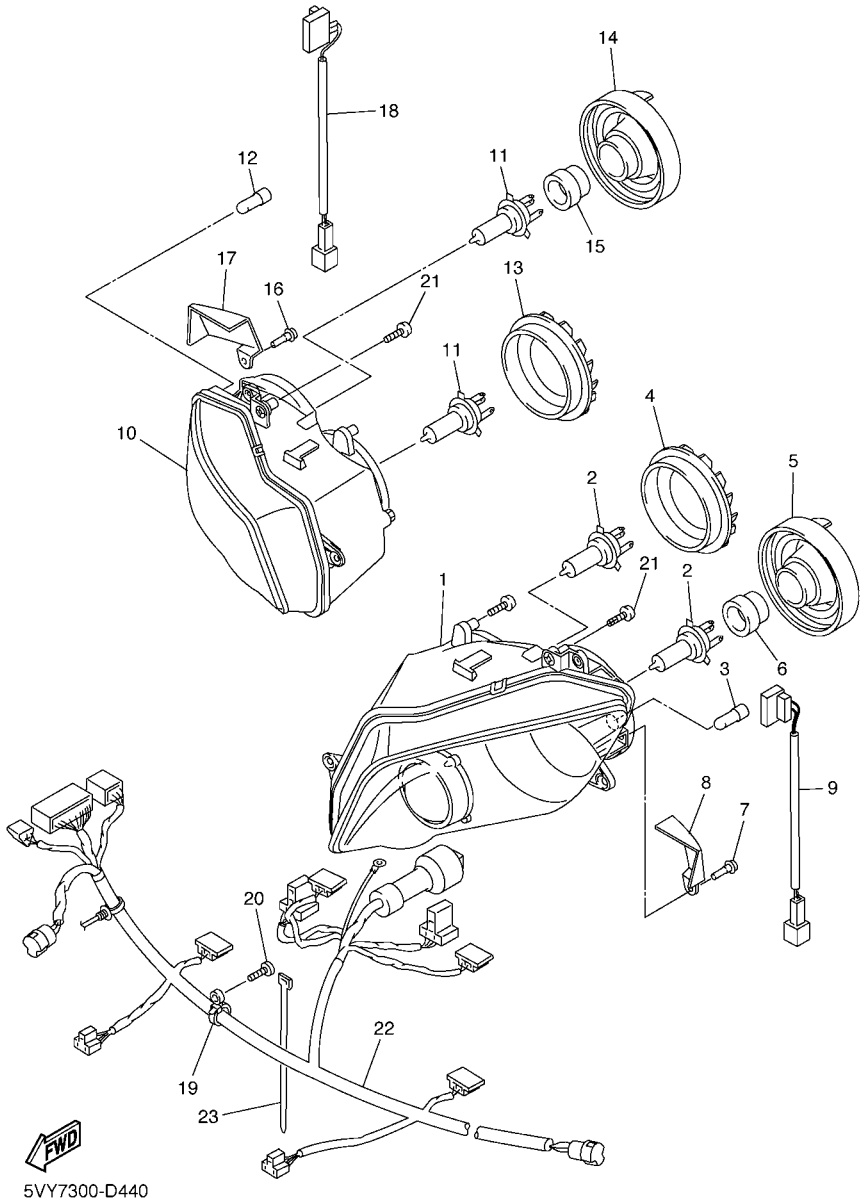

FIG. 44 FARO DELANTERO

REF. Nº	CODIGO Nº	DESCRIPCION	5VY7					OBSERVACIONES
1	5VY–84303–00	UNIDAD DE FARO DELANTERO COMPL	1					
2	4SV–84314–00	BOMBILLA (12V-55W)	2					(H7)HALOGEN
3	4SV–84347–00	BOMBILLA (12V-5W)	1					
4	5SL–84397–00	CUBIERTA DE ENCASTRE	1					
5	5GJ–84397–00	CUBIERTA DE ENCASTRE	1					
6	4SV–84350–00	ENCASTRE DE CABLE COMPLETO	1					
7	90269–06008	REMACHE	1					
8	5VY–84196–00	CUBIERTA (MI)	1					
9	5VY–84312–00	CABLE COMPL.	1					
10	5VY–84303–10	UNIDAD DE FARO DELANTERO COMPL	1					
11	4SV–84314–00	BOMBILLA (12V-55W)	2					(H7)HALOGEN
12	4SV–84347–00	BOMBILLA (12V-5W)	1					
13	5SL–84397–00	CUBIERTA DE ENCASTRE	1					
14	5GJ–84397–00	CUBIERTA DE ENCASTRE	1					
15	4SV–84350–00	ENCASTRE DE CABLE COMPLETO	1					
16	90269–06008	REMACHE	1					
17	5VY–84396–00	CUBIERTA (MD)	1					
18	5VY–84312–00	CABLE COMPL.	1					
19	90464–47001	BRIDA	1					
20	97707–50016	TORNILLO ROSCA HEMBRA	1					
21	90160–05006	TORNILLO REDONDO ROSCA HEMBRA	6					
22	5VY–84359–00	CABLE DE FARO DELANTERO	1					
23	90464–15195	BRIDA	1					

FIG. 45 LUZ DE COLA

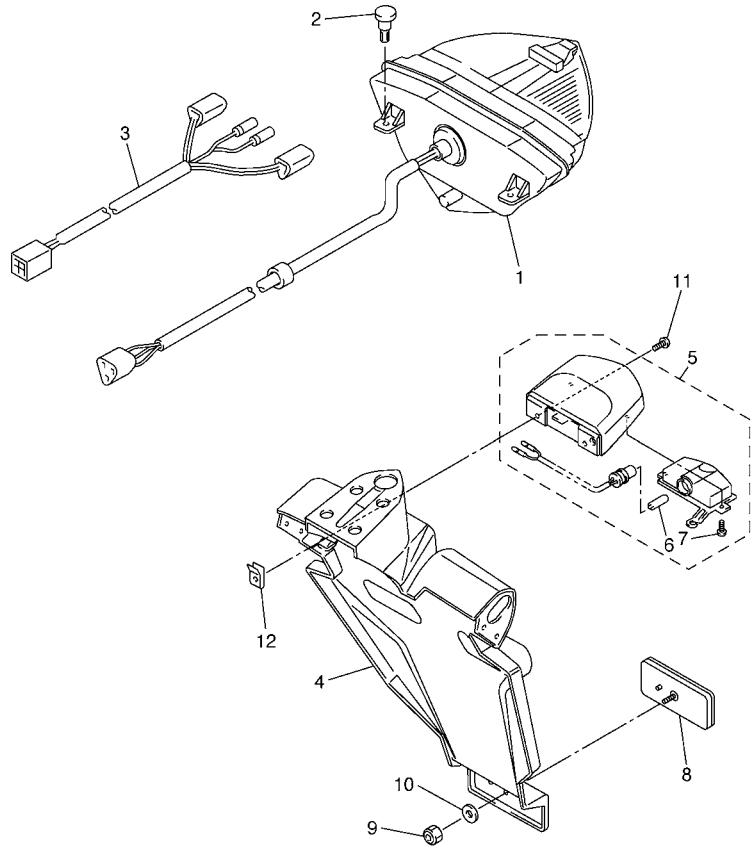

5VY1332-C450

REF. Nº	CODIGO Nº	DESCRIPCION	5VY7					OBSERVACIONES
1	5VY–84710–00	CONJT. FARO TRASERO	1					
2	90269–06081	REMACHE	2					
3	5PW–84717–00	CABLE DE FARO TRASERO	1					
4	5VY–21629–01	GUARDABARRO INFERIOR	1					
5	5VY–84745–00	UNIDAD DE LUZ DE LICENCIA COMP	1					
6	4HC–84744–00	.BOMBILLA (12V-5W)	1					
7	97706–04012	.TORNILLO, ROSCA CHAPA	2					
8	3Y6–85130–02	REFLECTOR TRASERO COMPLETO	1					
9	95607–05100	TUERCA AUTOBLOCANTE	1					
10	90201–05725	ARANDELA PLANA	1					
11	5VY–84726–00	TORNILLO	2					
12	4KB–84117–00	TUERCA	2					

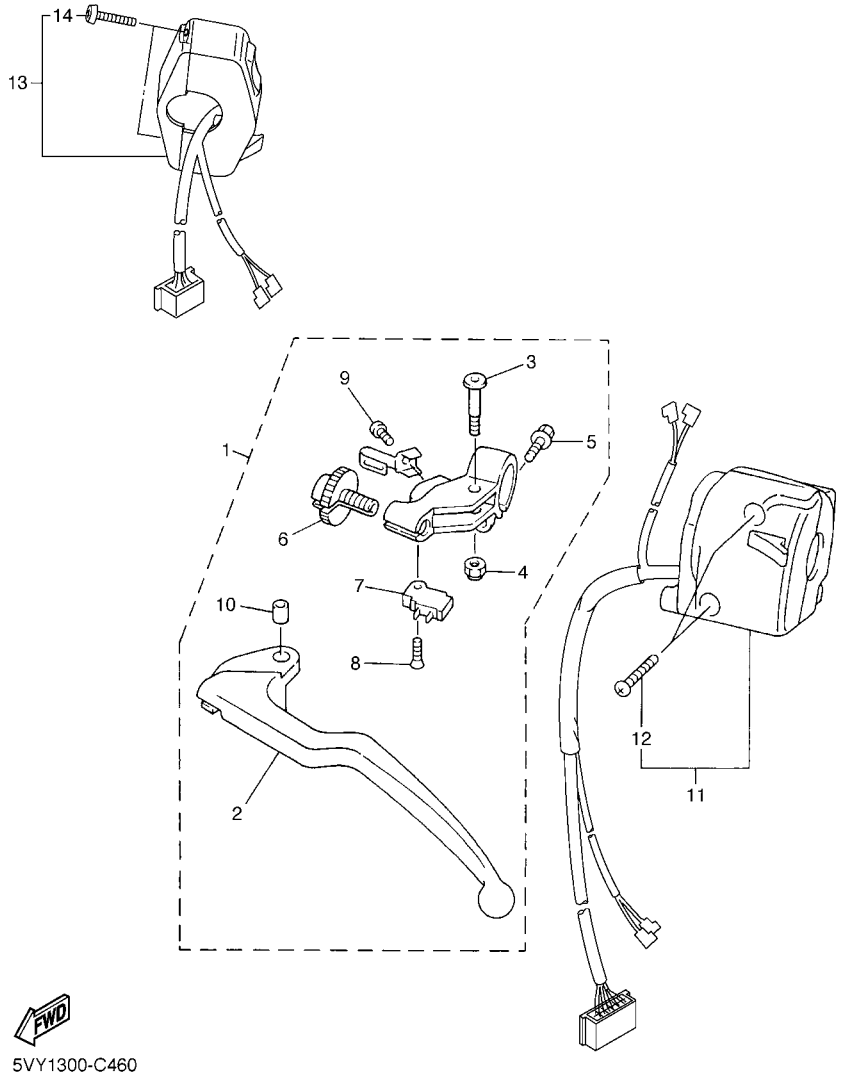

FIG. 46 INTERRUPTOR DE MANILLAR&PALANC

REF. Nº	CODIGO Nº	DESCRIPCION	5VY7					OBSERVACIONES
1	4XV–82910–14	SOPORTE DE LEVA COMPLT 1	1					
2	4XV–83912–11	.PALANCA 1	1					
3	4XV–83945–01	.PERNO DE PALANCA	1					
4	95607–06200	.TUERCA DE AUTO-CIERRE	1					
5	95027–06020	.PERNO, DE BRIDA	1					
6	5LV–83951–00	.PERNO DE CABLE DE AJUSTE	1					
7	4XV–82917–01	.INTERRUPTOR	1					
8	98707–03016	.TORNILLO DE CABEZA PLANA	1					
9	98507–04010	.TORNILLO DE CABEZA PLANA	1					
10	5JJ–83913–00	.COLLAR DE PALANCA 1	1					
11	5VY–83969–00	INTERRUPTOR DE MANIJA 5	1					
12	98507–05025	.TORNILLO DE CABEZA PLANA	2					
13	5PW–83975–00	INTERRUPTOR MANIJA 2	1					
14	98507–05022	.TORNILLO DE CABEZA PLANA	2					

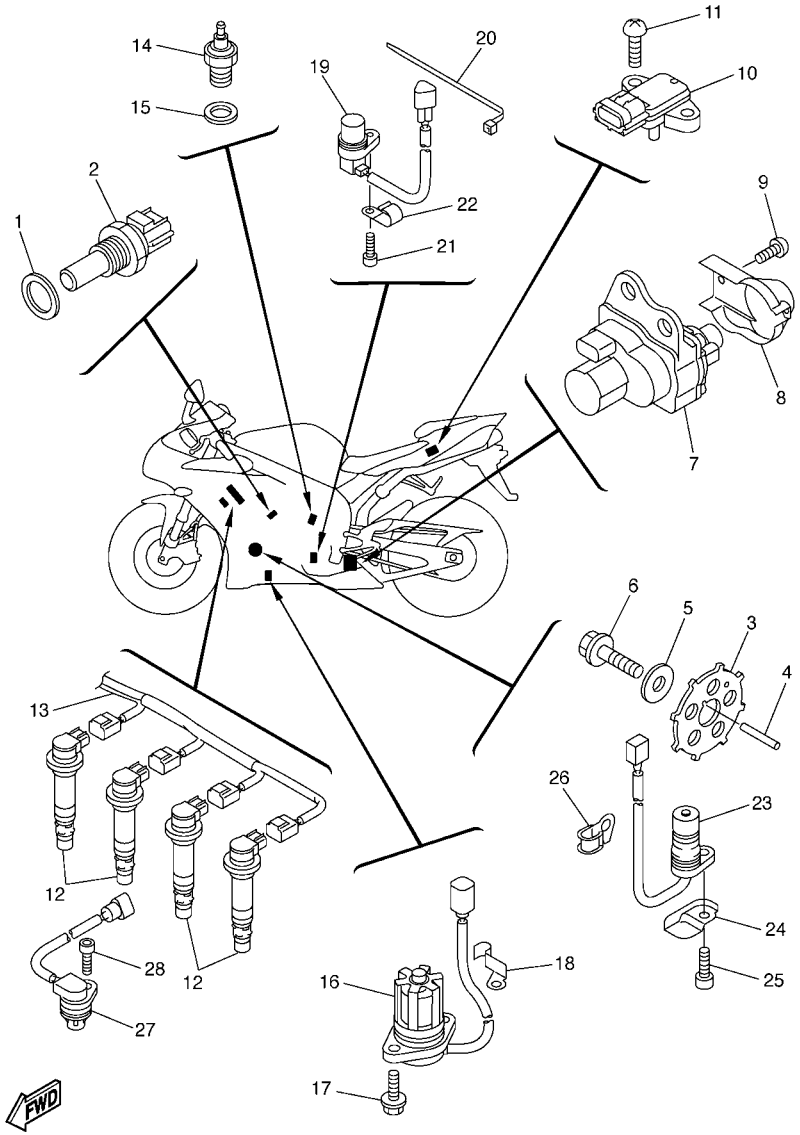

FIG. 47 EQUIPO ELECTRICO 1

REF. Nº	CODIGO Nº	DESCRIPCION	5VY7					OBSERVACIONES
1	90201–12790	ARANDELA PLANA	1					
2	8CC–85790–01	TERMICA SENSORIO	1					
3	5VY–81673–00	ROTOR	1					
4	90282–03001	CHAVETA, RECTA	1					
5	90201–103U4	ARANDELA PLANA	1					
6	90105–10290	TORNILLO	1					
7	5VY–85820–00	UNIDADDELSERVOMOTOR	1					
8	5VY–85829–00	CUBIERTA	1					
9	97707–50514	TORNILLO ROSCA HEMBRA	2					
10	5VX–82380–00	SENSOR DE PRESION	1					
11	97707–50020	TORNILLO ROSCA HEMBRA	2					
12	5VY–82310–00	BOBINA DE ENCENDIDO COMPLETA	4					
13	5VY–82309–00	CABLE SUBCONDUCTOR	1					
14	3GB–82540–01	INTERRUPTOR NEUTRAL COMPL	1					
15	90430–10148	JUNTA	1					
16	5VY–85720–00	MEDIDOR DE NIVEL DE ACEITE	1					
17	95027–06016	PERNO, DE BRIDA	2					
18	90465–08013	BRIDA	1					
19	4XV–83755–02	SENSOR DE VELOCI	1					
20	90464–51001	BRIDA	1					
21	90110–06041	TORNILLO ALLEN	1					
22	90465–08028	BRIDA	1					
23	5VY–81670–00	RECOGEDOR COMPL.	1					
24	5VY–15589–00	PLACA DE CUBIERTA DE ARRANQUE	1					
25	90110–06041	TORNILLO ALLEN	1					
26	90465–08191	BRIDA	1					
27	5VY–85896–00	SENSOR DE LEVA	1					

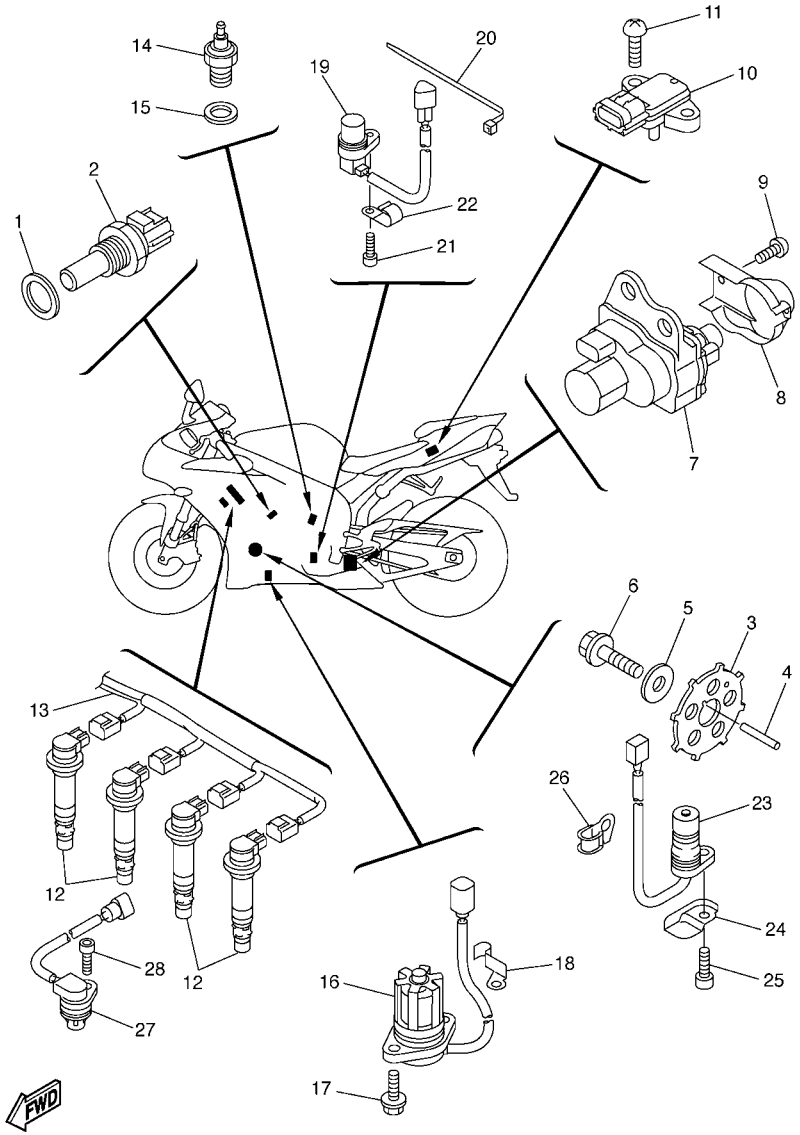

FIG. 47 EQUIPO ELECTRICO 1

REF. Nº	CODIGO Nº	DESCRIPCION	5VY7					OBSERVACIONES
28	90110–06117	TORNILLO ALLEN	1					

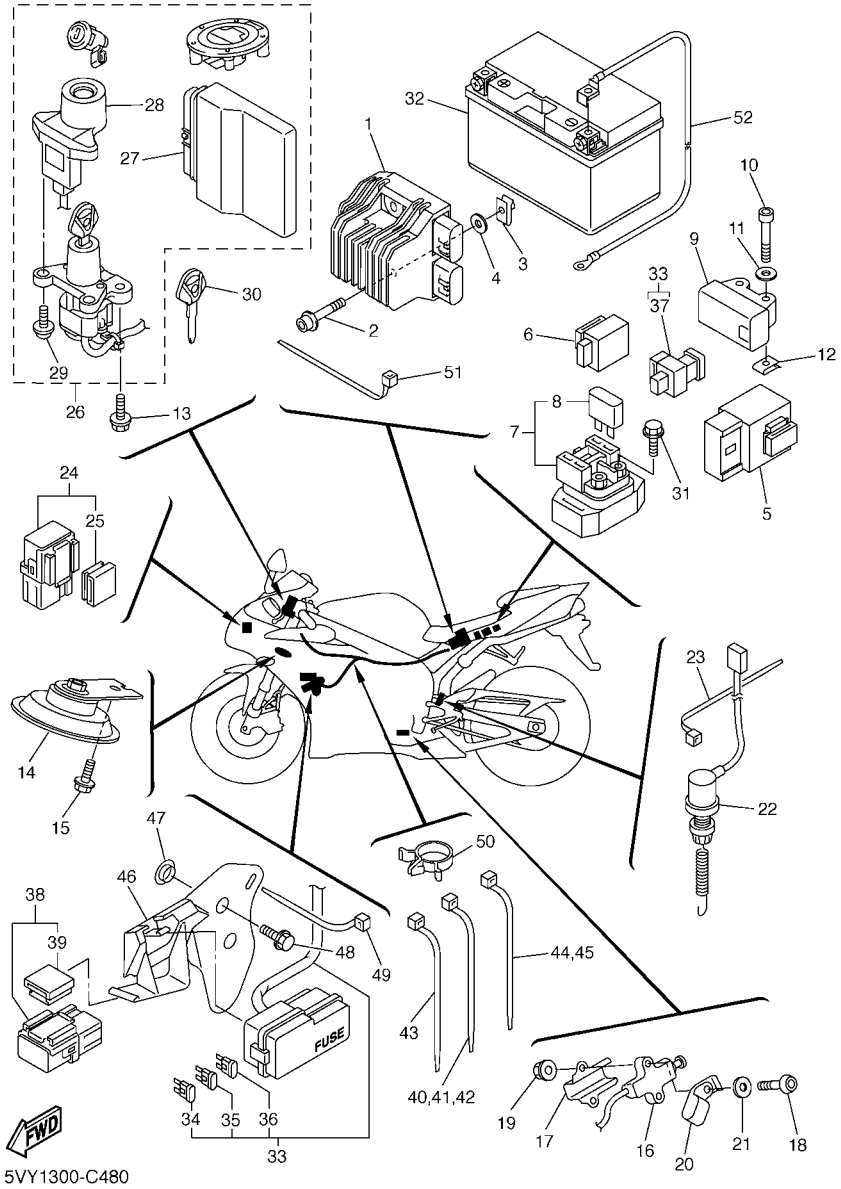

FIG. 48 EQUIPO ELECTRICO 2

REF. Nº	CODIGO Nº	DESCRIPCION	5VY7					OBSERVACIONES
1	5VY–81960–00	RECTIFICADOR Y REGULADOR	1					
2	90110–06066	TORNILLO ALLEN	2					
3	90183–06053	TUERCA DE RESORTE	1					
4	90202–05187	ARANDELA DE PLANA	2					
5	5VK–81950–40	RELE COMPLETO	1					
6	4GY–83350–00	RELE DE DESTELLADOR COMPL.	1					
7	5JW–81940–01	CONJUNTO ARRANCADOR RELEVO	1					
8	36Y–82151–00	.FUSIBLE (15A-BL)	2					
9	5PS–82576–01	INTERRUP.DE PARADA COMPLETO	1					
10	91317–04025	PERNO	2					
11	90201–047A2	ARANDELA PLANA	2					
12	90183–04039	TUERCA DE RESORTE	2					
13	90109–080G5	PERNO	2					
14	4TH–83371–00	BOCINA	1					
15	95807–06012	TUERCA DE REBORDE	1					
16	5PX–82566–51	INTERRUPTOR	1					
17	5JJ–82388–00	PLACA	1					
18	92017–05030	PERNO	2					
19	95607–05200	TUERCA DE AUTO-CIERRE	2					
20	90461–10002	GRAPA	1					
21	90201–057H5	ARANDELA PLANA	1					
22	5PW–82530–00	INTERRUPTOR DE PARADA COMPLETO	1					
23	5Y9–12491–00	GRAMPA 1	1					
24	5JJ–81950–20	RELE COMPLETO	2					
25	5JJ–81952–00	.SOSTEN DE RELE	1					
26	5VY–W8250–60	JUEGO DE INMOVILIZADOR	1					
27	5VY–8591A–60	.UNIDAD CONTROL	1					

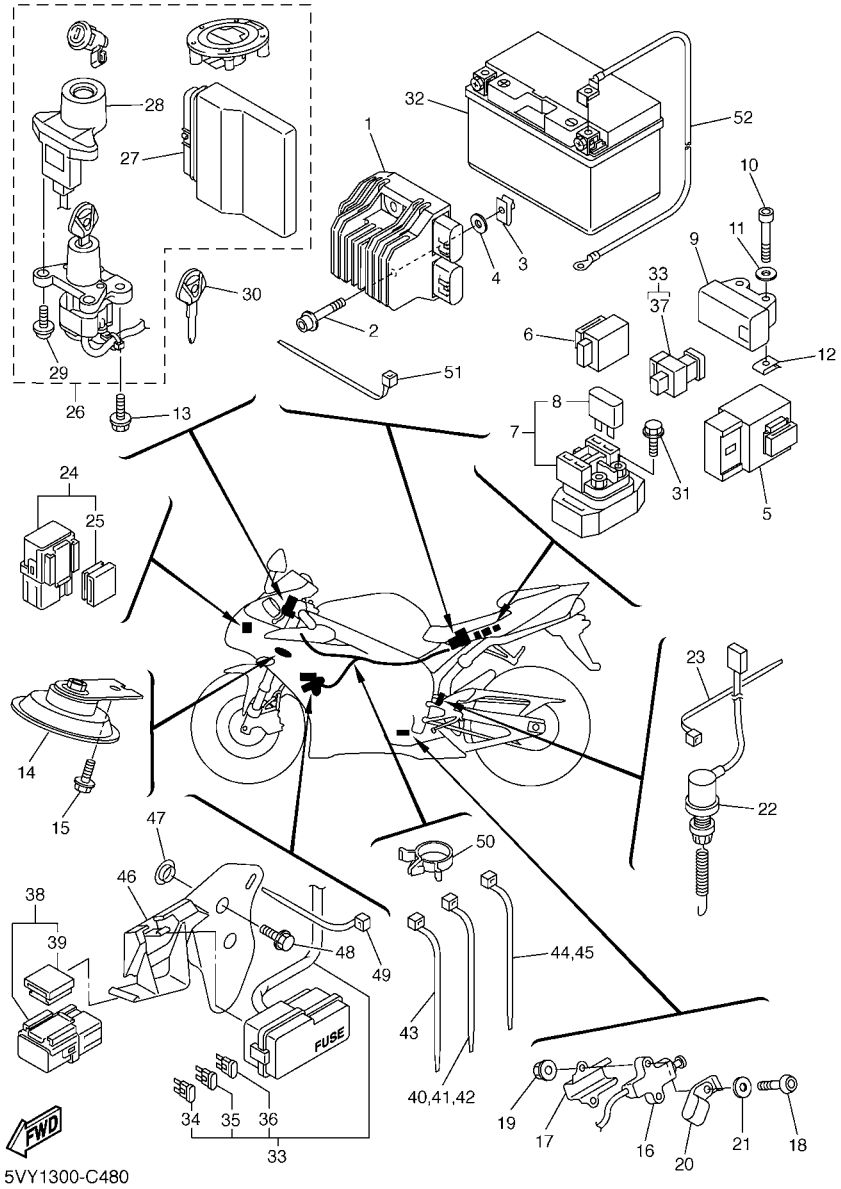

FIG. 48 EQUIPO ELECTRICO 2

REF. Nº	CODIGO Nº	DESCRIPCION	5VY7					OBSERVACIONES
28	5VY–8255P–00	.UNIDAD INMOVILIZADORA	1					
29	5SL–82113–00	.TORNILLO	2					
30	5SL–82511–08	BLANK KEY	1					AP
31	95027–06008	PERNO, DE BRIDA	2					
32	5VY–82100–00	BATERIA COMPLETA(YUASA YTZ10S)	1					
33	5VY–82590–01	CONJUNTO DE CABLES	1					
34	5JJ–82151–10	.FUSIBLE (15A-BL)	4					
35	5JJ–82151–30	.FUSIBLE (10A-BL)	4					
36	5JJ–82151–70	.FUSIBLE (25A-BL)	2					
37	5JW–82151–10	.FUSIBLE (50A)	1					
38	5EA–81950–20	RELE COMPLETO	1					
39	5EA–81952–00	.SOSTEN DE RELE	1					
40	90464–15195	BRIDA	1					
41	90464–15195	BRIDA	1					
42	90464–15195	BRIDA	1					
43	90464–13073	BRIDA	1					
44	1UA–82591–00	BANDA	1					
45	1UA–82591–00	BANDA	1					
46	5VY–82171–00	SOPORTE CAJA DE FUSIBLES	1					
47	90387–06040	COLLAR	2					
48	90119–06228	TORNILLO CON ARANDELA	2					
49	90464–13077	BRIDA	1					
50	90464–15157	BRIDA	1					
51	90464–13073	BRIDA	2					
52	5VY–82116–00	CABLE CONDUCTOR NEGATIVO	1					

INDICE NUMERICO

CODIGO Nº	REF. Nº
5VY–11101–01	B – 2
5VY–1111G–00	B – 3
5VY–11133–10	B – 2
5VY–11134–10	B – 2
5VY–11165–00	C – 11
5VY–11181–00	B – 2
5VY–11191–00	B – 2
5VY–11193–10	B – 2
214–11198–01	B – 14
5VY–11311–00	B – 4
5VY–1133E–00	C – 7
5VY–1133F–00	C – 8
5VY–11351–00	B – 4
5VY–11411–01	B – 5
5VY–11416–00	B – 5
5VY–11416–10	B – 5
5VY–11416–20	B – 5
5VY–11416–30	B – 5
5VY–11416–A0	B – 5
5VY–11445–00	C – 12
5VY–11478–00	C – 12
5VY–11537–00	C – 12
5VY–11549–00	B – 5
5VY–11603–01	B – 5
5VY–11631–10	B – 5
5VY–11633–00	B – 5
5VY–11650–01	B – 5
5VY–11654–01	B – 5
5VY–11656–00	B – 5
5VY–11656–10	B – 5
5VY–11656–20	B – 5
5VY–11656–30	B – 5
5VY–12111–00	B – 6
5VY–12112–00	B – 6
5VY–12113–00	B – 6
5VY–12114–00	B – 6
5NL–12116–00	B – 6
5VY–12117–00	B – 6
1HX–12118–00	B – 6
1WG–12118–00	B – 6
4SV–12119–00	B – 6
4TV–12119–00	B – 6
5VY–12121–00	B – 6
3GM–12126–00	B – 6
5VY–12127–00	B – 6
3FV–12153–09	B – 7
3LN–12153–09	B – 7
3FV–12153–20	B – 7

CODIGO Nº	REF. Nº
3LN–12153–20	B – 7
3FV–12153–30	B – 7
3LN–12153–30	B – 7
1HX–12168–00	B – 6
1HX–12168–20	B – 6
1HX–12168–40	B – 6
1HX–12168–60	B – 6
1HX–12168–80	B – 6
1HX–12168–A0	B – 6
1HX–12168–F0	B – 6
1HX–12168–H1	B – 6
1HX–12168–K1	B – 6
1HX–12168–M1	B – 6
1HX–12168–R1	B – 6
1HX–12168–U1	B – 6
1HX–12168–W1	B – 6
1HX–12168–Y1	B – 6
1HX–12169–11	B – 7
1HX–12169–31	B – 7
1HX–12169–50	B – 7
1HX–12169–70	B – 7
1HX–12169–90	B – 7
1HX–12169–E0	B – 7
1HX–12169–G0	B – 7
1HX–12169–J0	B – 7
1HX–12169–L0	B – 7
1HX–12169–N0	B – 7
1HX–12169–T0	B – 7
5VY–12170–00	B – 8
5VY–12176–00	B – 8
5VY–12180–00	B – 8
5VY–12210–00	B – 8
5BE–12241–00	B – 2
5VY–12251–00	B – 8
5VY–12252–00	B – 8
5VY–12277–00	E – 2
5VY–12405–00	B – 12
5VY–12405–10	B – 12
5VY–12410–00	B – 11
5LP–12411–00	B – 11
5VY–12421–00	B – 9
5VY–12422–00	B – 9
11H–12438–10	B – 9
4XV–12439–00	B – 9
5VY–1243A–00	B – 11
5VY–1243E–00	B – 11
5VY–1243F–00	B – 11
5VY–12443–00	C – 11

CODIGO Nº	REF. Nº
5VY–1244G–00	B – 11
5VY–12450–00	B – 9
5VY–12456–00	B – 9
5VY–12461–00	B – 12
5SL–12462–00	B – 12
5VY–12469–00	B – 9
5GV–1246A–00	B – 11
5GV–1246E–00	B – 12
5VY–12481–00	B – 10
5VY–12483–01	B – 11
5VY–12484–00	B – 10
4XV–12485–00	B – 9
5VY–12485–00	B – 11
5Y9–12491–00	G – 5
5VY–12494–00	B – 12
5VY–12551–00	B – 12
5VY–12552–00	B – 11
5VY–12576–00	B – 9
5VY–12577–00	B – 11
5VY–12578–00	B – 11
5VY–12579–00	B – 11
5VY–12588–00	B – 10
5VY–12589–01	B – 12
5VY–12637–00	B – 9
5GJ–12675–00	B – 12
5VY–12682–00	C – 2
5EB–12822–00	B – 14
5VY–13117–00	B – 13
5VY–13161–00	B – 14
5VY–1316E–00	B – 13
5VY–13310–00	B – 9
5VY–13336–00	B – 9
5VY–13354–00	C – 14
5VY–13355–00	B – 9
5VY–13410–00	B – 13
5VY–13414–01	B – 14
5VY–13416–00	B – 13
5VY–13417–00	B – 14
5VY–13418–00	C – 9
5GH–13440–00	B – 14
5VY–13470–00	B – 14
5JW–13473–00	B – 14
5EB–13475–00	B – 14
5VY–13490–00	B – 14
5VY–13543–00	C – 4
5VY–13595–00	B – 15
5VY–13596–00	B – 15
5VY–13597–00	B – 15

CODIGO Nº	REF. Nº
5VY–13598–00	B – 15
5VY–13750–00	C – 3
5VY–13761–00	C – 4
5VY–13898–00	B – 13
5VY–13906–00	C – 3
5PW–13907–01	E – 4
5VY–13971–00	C – 4
5VY–13972–00	C – 4
5PW–14103–00	C – 4
5JW–14104–00	C – 4
5PW–1410F–00	C – 3
4KM–14137–00	C – 3
5PS–14147–00	C – 4
5VY–14171–00	C – 3
5VY–14204–00	C – 3
8CC–14216–10	C – 4
5PW–14251–00	C – 3
5VY–14348–00	C – 4
5PW–14349–00	C – 3
5SL–14349–00	C – 4
5FL–14349–10	C – 3
5JW–14396–00	C – 3
5VY–1440B–00	B – 15
5VY–14411–00	B – 15
5VY–14413–00	C – 4
5VY–14419–00	B – 15
5VY–14421–00	B – 15
5VY–14425–00	C – 2
31A–14435–00	B – 15
5VY–14435–00	B – 15
5VY–14451–00	B – 15
5VY–14452–00	B – 15
5VY–14457–00	B – 15
5VY–14462–00	B – 15
5VY–14467–00	B – 15
5VY–14498–00	B – 15
5JW–14589–00	C – 4
5VY–14602–00	C – 6
5VY–14610–00	C – 6
4FM–14613–00	C – 6
5VY–14623–00	C – 6
5VY–14638–00	C – 6
5VY–14643–00	C – 6
5VY–14648–00	C – 6
5VY–14674–00	C – 6
5VY–14710–00	C – 6
5VY–14714–00	C – 6
5JJ–14715–00	C – 6

CODIGO Nº	REF. Nº
5VY–14715–00	C – 6
5VY–14718–01–P0	C – 8
5VY–14720–00	C – 7
5VY–14728–01–P0	C – 8
5VY–14740–00	C – 6
5VY–14747–00	C – 7
5VY–14755–00	C – 6
5VY–14757–00	C – 8
	D – 8
5VY–1475P–00	C – 8
5VY–1476P–00	C – 8
5VY–1477P–00	C – 8
5VY–1478P–00	C – 8
5VY–14811–00	C – 6
5VY–14821–00	C – 6
5VY–14826–00	C – 6
5VY–1482K–00	B – 2
5VY–14840–00	C – 5
5VY–14856–00	C – 6
5VY–14862–00	B – 15
5VY–14865–00	C – 6
5VY–14867–00	C – 6
5VY–14881–00	C – 5
5VY–14882–00	C – 5
5VY–14883–00	C – 5
5SL–14890–00	B – 2
5VY–14899–00	B – 2
5VY–14905–00	C – 4
5DM–14936–00	C – 3
22U–14952–00	C – 3
5PS–14987–00	C – 3
5VY–15100–00	C – 9
5VY–15113–00	C – 11
5EB–15155–00	C – 9
5VY–15163–00	C – 15
5VY–15164–00	C – 10
36Y–15189–00	C – 11
4H7–15189–00	C – 11
5PX–15189–00	C – 10
5VY–15191–00	F – 10
5VY–15316–00	C – 9
5PW–15361–00	C – 9
5VY–15362–00	C – 10
1UF–15379–00	D – 8
5VY–15393–00	B – 15
5VY–15411–00	C – 10
5VY–15413–00	C – 11
5VY–15416–00	C – 10

CODIGO Nº	REF. Nº
5VY–15418–00	C – 10
5VY–15421–00	C – 10
5VY–15431–00	C – 11
5VY–15441–00	C – 11
5VY–15451–00	C – 10
5VY–15456–00	C – 11
5VY–15461–00	C – 10
5VY–15462–00	C – 11
5VY–15499–00	C – 10
5VY–15515–00	C – 12
5VY–15517–00	C – 12
5VY–15521–00	C – 12
5VY–15542–00	C – 10
5VY–15570–00	C – 12
5VY–15586–00	C – 12
5VY–15589–00	G – 3
5VY–16150–00	C – 13
5VY–16154–00	C – 13
5VY–16155–00	C – 12
5VY–16164–00	C – 14
5VY–16181–00	C – 14
5VY–16321–00	C – 13
5VY–16325–00	C – 13
5VY–16330–00	C – 13
5VY–16331–00	C – 13
5VY–16340–00	C – 13
132–16346–00	D – 4
5VY–16351–00	C – 13
4XV–16356–01	C – 13
5VY–16370–00	C – 13
5VY–16382–00	C – 13
5VY–16383–00	C – 13
5VY–16384–00	C – 13
4X7–16385–00	C – 13
5VY–17121–00	C – 15
5VY–17131–00	C – 15
5VY–17151–00	C – 15
5VY–17161–00	C – 15
5VY–17211–00	D – 2
5VY–17221–10	C – 15
5VY–17231–00	D – 2
5VY–17241–00	C – 15
5VY–17251–00	D – 2
5VY–17261–10	C – 15
5VY–17402–00	C – 15
5VY–17411–00	C – 15
5VY–17442–00	C – 15
5VY–17446–00	C – 15

INDICE NUMERICO

CODIGO Nº	REF. Nº
3CV–17460–00	D – 2
5VY–18101–00	D – 4
5VY–18110–00	D – 4
5VY–18112–00	D – 4
5EB–18113–00	D – 4
5VY–18115–00	D – 4
5LV–18116–00	D – 4
5VY–18127–00	D – 4
5VY–18140–00	D – 4
5VY–18144–00	D – 4
4XV–18154–00	D – 4
5VY–18511–01	D – 3
5VY–18512–01	D – 3
5VY–18513–01	D – 3
5VY–18531–00	D – 3
5VY–18535–00	D – 3
5VY–18536–00	D – 3
5VY–18540–00	D – 3
136–18542–00	D – 3
5VY–18562–00	D – 3
5VY–2110M–00	D – 6
5VY–2110M–10	D – 6
5VY–21110–01	D – 5
5VY–21131–00	D – 5
5VY–2116J–00	D – 5
5VY–2117K–01	E – 7
5VY–2117R–00	D – 6
5VY–2117V–00	F – 9
5VY–2117W–00	F – 9
5VY–21190–00	D – 5
5VY–21268–00	D – 5
5VY–21269–00	D – 5
5VY–2131P–00	D – 6
4XV–21376–00	D – 7
5VY–21414–00	D – 5
5VY–21424–00	D – 5
5VY–21435–00	D – 5
5VY–2144G–00	F – 3
5EB–21495–00	D – 5
5PW–21511–00–P1	D – 7
5PW–21511–00–P3	D – 7
5PW–21511–00–P5	D – 7
5JJ–2153E–00	F – 8
5JJ–2153E–10	F – 8
5JJ–2153E–20	F – 8
5VY–21611–00–P0	D – 7
5VY–21611–00–P1	D – 7
5VY–21611–00–P3	D – 7

CODIGO Nº	REF. Nº
5VY–21617–00	D – 7
5VY–2161G–00	D – 8
5VY–21629–01	F – 15
5VY–21639–00	D – 8
5VY–2163A–00	D – 8
5VY–2163E–00	D – 8
5VY–2164F–00	D – 8
5VY–2164G–00	D – 7
5VY–2164K–00	D – 8
5VY–2164L–00	D – 8
5VY–21650–00	D – 13
5VY–21652–00	D – 8
5VY–21669–00	D – 7
5VY–21710–01–P0	D – 10
5VY–21710–01–P3	D – 10
1UJ–21717–00	D – 10
5VY–2171A–01–P0	E – 5
5VY–2171A–01–P1	E – 5
5VY–2171A–01–P3	E – 5
1FK–2171H–00	F – 6
5VY–2172E–00	D – 10
5VY–2172P–00	D – 10
5PW–21732–00	D – 8
	D – 10
5VY–21732–00	D – 8
1JK–21735–00	D – 10
5VY–2173L–00	D – 10
5VY–2173P–00	D – 10
5VY–21746–00	D – 6
5VY–21747–00	D – 10
5PW–2174X–00	D – 10
5VY–2174X–00	D – 6
5VY–2174Y–00	D – 6
2TK–21757–00	F – 7
5VY–2176V–00	E – 7
5PW–2177L–00	F – 5
	F – 7
26H–21828–00	D – 10
5VY–21843–00	D – 10
5VY–21871–00	D – 10
5VY–21875–00	D – 10
5VY–21880–00	C – 7
5VY–21890–00	C – 7
5VY–22110–00	D – 12
5VY–22128–00	D – 12
5VY–22128–10	D – 12
5VY–22141–00	D – 13
5VY–22151–00	D – 12

CODIGO Nº	REF. Nº
5VY–2217A–00	D – 12
5VY–2217M–00	D – 12
5VY–22184–00	D – 12
5VY–22210–00	D – 14
5SL–22219–00	D – 14
5VY–22311–00	D – 12
5VY–22873–00	D – 12
5VY–23102–00	E – 2
5VY–23103–00	E – 2
5VY–23110–00	E – 2
5VY–23111–00	E – 2
5VY–23118–00	E – 2
5VY–23120–00	E – 2
5VY–23136–00	E – 2
5VY–23141–00	E – 2
4PU–23144–00	E – 2
4PU–23145–01	E – 2
5PW–23146–00	E – 2
3XJ–23147–L0	E – 2
4V4–23153–L0	E – 2
509–23158–L0	E – 2
5VY–23170–00	E – 2
5UX–23181–00	E – 2
5VY–23340–00	E – 3
3LC–23357–00	E – 2
5VY–23377–00	E – 14
5VY–23389–00	E – 13
4XV–23415–01	D – 15
4XV–23418–00	D – 15
4XV–2341B–00	D – 15
4XV–23434–00	E – 13
5VY–23435–00	D – 15
3FV–23462–00	D – 15
2H9–23469–00	E – 13
5VY–23490–00	E – 13
5VY–23495–00	E – 13
5VY–23808–00	D – 15
5VY–24117–00	E – 5
5VY–24118–00	E – 5
5PW–2411J–01	E – 6
5VY–24129–01	E – 6
5VY–24139–01	E – 6
5PW–2413B–00	E – 6
5VY–2413Y–00	E – 4
5VY–24145–00	E – 5
5PW–2414H–00	E – 6
5VY–2414H–00	E – 6
5PW–2414J–00	E – 6

CODIGO Nº	REF. Nº
5VY–2414J–00	E – 5
5VY–2414K–00	E – 6
5VY–2414N–00	E – 6
5VY–2414P–00	E – 6
5VY–2414R–00	E – 6
5VY–24181–00	E – 4
5SL–24183–00	E – 4
5VY–24183–00	E – 4
5VY–24191–00	E – 4
5PW–24192–00	E – 4
5VY–24192–00	E – 4
5VY–24315–00	E – 5
5VY–24316–00	E – 5
5VY–24317–00	E – 5
68V–24376–00	C – 3
5JW–24486–00	E – 5
5VY–24491–00	E – 4
5JJ–24602–00	E – 4
5VY–2470F–00	E – 7
5VY–24710–00	E – 7
5SL–24723–00	E – 7
5VY–24729–00	E – 7
5VY–24750–00	E – 7
5VY–24751–00	E – 7
5VY–24780–00	E – 7
5VY–2478E–00	E – 7
5VY–24792–00	E – 7
4XV–25117–00	E – 8
4XV–25118–00	E – 8
5VY–25168–00–98	E – 8
5VY–25168–00–P0	E – 8
5PW–25181–00	E – 8
4XV–25186–00	E – 8
5PW–25188–00	E – 8
5PW–25317–00	E – 10
5VY–25338–00–98	E – 10
5VY–25338–00–P0	E – 10
5VX–25364–00	E – 10
5SL–25366–00	E – 10
5PW–25367–00	E – 10
5SL–25367–00	E – 10
5SL–25376–00	E – 10
5PW–25377–00	E – 10
5SL–25381–00	E – 11
4XV–25383–00	E – 10
5VY–25388–00	E – 10
5VY–25389–00	E – 10
5MT–25398–00	E – 8

CODIGO Nº	REF. Nº
5MT–25398–00	E – 10
5MT–25398–10	E – 8
	E – 10
5MT–25398–20	E – 8
	E – 10
5VY–25445–20	E – 10
5VY–2580T–00	E – 9
5VY–2580U–00	E – 9
5VY–2580W–00	E – 12
5VY–2581T–00	E – 9
5SL–25827–00	E – 12
5SL–25827–10	E – 12
5SL–25828–00	E – 12
5SL–2582A–00	F – 4
5SL–2582W–00	E – 12
5SL–25838–00	E – 12
5VY–2583B–00	E – 9
5SL–2583V–00	F – 4
5SL–25852–00	F – 4
5VY–25852–00	E – 14
5SL–25854–00	F – 4
5VY–25854–00	E – 14
5SL–25855–00	F – 4
5VY–25855–00	E – 14
4BP–2585F–00	F – 4
5VS–2585H–00	E – 14
5VS–25867–00	E – 14
5VS–2586F–00	E – 14
5VY–25872–00	E – 14
5VY–25874–01	F – 4
5VY–25875–00	E – 14
5VY–25876–00	E – 15
5VY–25886–00	F – 4
5SL–25894–00	F – 4
5SL–25894–20	E – 14
5VY–25895–00	F – 4
5VY–25895–10	E – 14
5VY–2589F–01	E – 14
5VY–2589G–00	E – 14
5VY–2589H–00	E – 14
5SL–25914–00	E – 12
5DH–25916–00	E – 12
3JD–25917–00	E – 12
5SL–25917–00	E – 12
4SV–25919–00	E – 9
5SL–25919–00	E – 12
5VY–25921–50	E – 12
4SV–25924–00	E – 9

CODIGO Nº	REF. Nº
8CR–25924–00	E – 12
3GM–25925–00	E – 9
5SL–25926–00	E – 12
5VY–25975–00	E – 14
5VY–26121–00	E – 13
5VY–26122–00	E – 13
4YR–26240–02	E – 13
4YR–26241–02	E – 13
5PW–26246–00	E – 13
5VY–26280–00	F – 6
5VY–26281–00	E – 13
3XW–26282–01	E – 13
5VY–26290–00	F – 6
5VY–26292–10	D – 15
5VY–26298–00	F – 6
5VY–26302–01	E – 13
5VY–2631E–00	E – 13
5VS–26332–00	E – 14
5VY–26335–01	E – 13
5VY–26398–00	E – 13
5VY–27211–00	F – 4
5SL–27222–00	F – 4
5VY–27311–00	F – 2
5JJ–27315–00	F – 2
5JJ–27321–00	F – 2
4NX–27351–00	F – 2
5PW–27352–00	F – 2
5VY–27410–00	F – 2
5VY–2741L–00	F – 3
5VY–27420–00	F – 2
4XV–27424–00	C – 7
5VY–27424–00	C – 7
5VY–27425–00	F – 3
5VY–2742L–00	F – 3
5JJ–27431–00	F – 3
5JJ–27437–00	F – 3
5JJ–27441–00	F – 3
5VY–27442–01	F – 2
5VY–27443–01	F – 2
5VY–27445–00	F – 2
5VY–27446–00	F – 3
5VY–27490–00	D – 8
5VY–28100–00	D – 9
5VY–28199–S1	D – 9
5VY–28307–00	F – 8
5VY–28322–00	F – 7
5VY–2832P–00	F – 5
5VY–28332–00	F – 7

INDICE NUMERICO

CODIGO Nº	REF. Nº
4XV–28336–00	F – 5
5VY–28346–00	F – 6
5VY–2834C–00	F – 7
5VY–2834C–20	F – 7
4XV–2834E–00	E – 5
5VY–2834E–00	F – 6
5VY–2834F–00	F – 6
5VY–2834V–00	F – 5
5JJ–2834W–00	F – 5
5VY–28356–00	F – 5
5VY–2835C–00	F – 7
5VY–2835C–20	F – 7
5VY–2835G–00–P0	F – 5
5VY–2835G–00–P1	F – 5
5VY–2835G–00–P3	F – 5
5VY–2836A–00	F – 9
5VY–2836C–10	F – 7
5VY–2836E–00	F – 9
5VY–2836K–00	F – 7
5VY–2836L–00	F – 7
5VY–2836M–00	F – 9
5VY–28371–00	F – 6
5PW–28372–00	D – 13
5VY–28372–00	F – 6
5VY–2837C–10	F – 7
5VY–2837J–00	F – 8
5VY–2837K–00	F – 8
5VY–2837L–01	F – 5
5VY–2837M–01	F – 5
5VY–2837N–00	F – 5
5VY–2837R–00	F – 6
5VY–2837V–00	F – 6
5VY–2837W–00	F – 6
5PW–28386–00	F – 7
5VY–2838G–00	D – 8
5VY–2838N–00–P0	F – 5
5VY–2838N–00–P2	F – 5
5VY–2838R–00–P0	F – 6
5VY–2838R–00–P2	F – 6
5VY–28391–10	F – 7
5VY–28392–10	F – 7
5VY–2848H–00	F – 7
5VY–2848K–00	F – 7
5VY–2848L–00	F – 8
5VY–2848M–00	F – 8
5VY–2848N–00	F – 8
5VY–2848P–00	F – 8
5VY–2848R–00	F – 9

CODIGO Nº	REF. Nº
5VY–28494–00	F – 7
5VY–81410–00	F – 10
5VY–81450–00	F – 10
5VY–81670–00	G – 3
5VY–81673–00	G – 3
5PW–81801–00	F – 11
5PW–8181L–00	F – 11
5PW–81828–00	F – 11
5VY–8183G–00	F – 11
5PW–81846–00	F – 11
5VY–81890–00	F – 11
5JW–81940–01	G – 5
5EA–81950–20	G – 6
5JJ–81950–20	G – 5
5VK–81950–40	G – 5
5EA–81952–00	G – 6
5JJ–81952–00	G – 5
5VY–81960–00	G – 5
5VY–82100–00	G – 6
5SL–82113–00	G – 6
5VY–82116–00	G – 6
5VY–82122–00	D – 7
5VY–82123–00	D – 7
5VY–8212B–00	D – 7
5VY–8212C–00	D – 7
133–82131–00	D – 7
36Y–82151–00	G – 5
5JJ–82151–10	G – 6
5JW–82151–10	G – 6
5JJ–82151–30	G – 6
5JJ–82151–70	G – 6
5VY–82171–00	G – 6
5VY–82309–00	G – 3
5VY–82310–00	G – 3
5VX–82380–00	C – 3
	G – 3
5VY–82386–00	C – 3
5JJ–82388–00	G – 5
5SL–82511–08	G – 6
5PW–82530–00	G – 5
3GB–82540–01	G – 3
5VY–8255P–00	G – 6
5PX–82566–51	G – 5
5PS–82576–01	G – 5
5VY–82590–01	G – 6
1UA–82591–00	G – 6
3MA–82591–00	E – 14
4XV–82910–14	G – 2

CODIGO Nº	REF. Nº
4XV–82917–01	G – 2
5PW–83310–01	F – 12
1KH–83311–00	F – 12
5PW–83318–00	F – 12
5PW–83320–01	F – 12
5PW–83330–00	F – 12
5PW–8333A–00	F – 12
5PW–83340–00	F – 12
5PW–8334A–00	F – 12
4GY–83350–00	G – 5
4TH–83371–00	G – 5
5VY–83500–00	F – 13
4XV–83513–00	F – 5
5PW–8352S–00	F – 13
5VY–8353E–00	F – 13
5VY–83572–00	F – 13
4XV–83755–02	G – 3
4XV–83912–11	G – 2
5JJ–83913–00	G – 2
5VY–83922–00	E – 14
4XV–83945–01	G – 2
5LV–83951–00	G – 2
5VY–83969–00	G – 2
5PW–83975–00	G – 2
4HM–83980–00	E – 14
4KB–84117–00	F – 15
5VY–84196–00	F – 14
5VY–84303–00	F – 14
5VY–84303–10	F – 14
5VY–84312–00	F – 14
4SV–84314–00	F – 14
4SV–84347–00	F – 14
4SV–84350–00	F – 14
5VY–84359–00	F – 14
5VY–84396–00	F – 14
5GJ–84397–00	F – 14
5SL–84397–00	F – 14
5VY–84710–00	F – 15
5PW–84717–00	F – 15
5VY–84726–00	F – 15
4HC–84744–00	F – 15
5VY–84745–00	F – 15
5SL–84753–00	D – 6
	F – 6
3Y6–85130–02	F – 15
5VY–85720–00	G – 3
8CC–85790–01	G – 3
5VY–85820–00	G – 3

CODIGO Nº	REF. Nº
5VY–85829–00	G – 3
5VY–85850–00	C – 3
5FL–85885–01	C – 3
5CA–85886–00	B – 15
5VY–85896–00	G – 3
5VY–8591A–60	G – 5
5VY–W0041–00	E – 14
5SL–W0042–50	F – 4
5VY–W0045–00	E – 9
5VX–W0046–00	E – 12
5PW–W0047–00	E – 9
5SL–W0047–00	E – 12
5PW–W0047–10	E – 9
1J3–W0048–00	E – 9
1UY–W0048–00	E – 12
5VY–W0048–00	E – 14
5PW–W0057–00	E – 9
5VY–W0057–00	E – 12
5PW–W0057–10	E – 9
5VY–W2470–00	E – 7
5VY–W2587–10	E – 14
5VY–W8250–60	G – 5
5VY–Y2171–11–P1	D – 10
5VY–Y2808–00–P0	F – 8
5VY–Y2808–10–P2	F – 8
5VY–Y2808–20–P1	F – 8
5VY–Y2809–00–P0	F – 8
5VY–Y2809–10–P2	F – 8
5VY–Y2809–20–P1	F – 8
5VY–Y283U–00–P0	F – 7
5VY–Y283U–30–P1	F – 7
5VY–Y283U–40–P3	F – 7
5VY–Y283V–00–P0	F – 7
5VY–Y283V–30–P1	F – 7
5VY–Y283V–40–P3	F – 7
5VY–Y2881–00	F – 5
5VY–YK241–30–P0	E – 4
5VY–YK241–30–P1	E – 4
5VY–YK241–M0–P2	E – 4
90101–08662	F – 2
90101–08766	E – 11
90105–05002	E – 5
90105–06026	B – 2
90105–06041	E – 14
90105–06050	F – 10
90105–06052	D – 10
90105–06154	B – 9
90105–066A5	B – 9

CODIGO Nº	REF. Nº
90105–07003	B – 8
90105–08015	C – 9
90105–08063	C – 6
90105–10017	D – 12
	D – 14
90105–10290	G – 3
90105–14002	E – 8
90109–05005	B – 15
90109–06013	F – 4
90109–06014	C – 11
90109–06015	C – 11
90109–06016	C – 10
90109–06031	C – 10
90109–06043	D – 7
90109–06056	D – 5
	F – 9
90109–06063	C – 9
90109–065G4	D – 15
90109–066F0	B – 2
90109–080G5	G – 5
90109–083E0	F – 2
90109–085G6	F – 2
90109–10002	F – 2
90109–103A9	F – 2
90110–05014	E – 5
	E – 13
90110–05018	E – 13
90110–05112	E – 4
90110–06004	B – 11
	C – 11
90110–06018	B – 13
	B – 14
	C – 11
	D – 3
90110–06019	B – 10
90110–06020	B – 14
	C – 10
90110–06026	B – 9
90110–06027	C – 15
90110–06041	B – 10
	B – 13
	C – 9
	G – 3
90110–06047	C – 10
90110–06060	B – 13
90110–06063	C – 12
90110–06066	G – 5
90110–06110	C – 6

CODIGO Nº	REF. Nº
90110–06112	C – 10
90110–06117	G – 4
90110–06118	B – 2
90110–06181	E – 13
90110–06258	E – 7
90110–08068	C – 10
90110–10005	D – 5
90110–10011	D – 13
90111–05003	D – 13
90111–05007	D – 10
90111–06003	F – 2
90111–06019	D – 4
90111–06030	D – 7
	F – 9
90111–06038	C – 8
90111–06041	D – 15
90111–06043	D – 7
90111–06052	D – 8
90111–08016	C – 7
90116–10020	C – 9
90116–10023	C – 9
90116–10485	E – 10
90119–05011	D – 8
90119–05193	D – 8
90119–06228	G – 6
90119–09003	C – 9
90149–05244	E – 14
90149–06020	C – 10
90149–06035	F – 10
90149–06043	E – 9
90149–06298	D – 9
	D – 12
90149–06302	D – 13
	F – 9
90149–06304	F – 3
90149–08009	E – 12
90149–10015	D – 5
90149–10017	D – 5
90150–05024	F – 5
90151–06022	C – 11
90153–06029	B – 10
90154–05004	B – 15
90154–05012	E – 5
90154–05013	F – 5
90159–05015	E – 6
90159–06009	C – 13
90159–06056	F – 4
90159–06150	F – 3

INDICE NUMERICO

CODIGO Nº	REF. Nº
90160–05006	F – 13
	F – 14
90160–05007	F – 5
90167–05080	D – 6
90170–06228	D – 4
90170–28419	D – 15
90176–06055	F – 6
90176–06065	B – 11
90176–10075	B – 2
90179–05523	E – 5
	F – 5
90179–06M28	C – 6
90179–08410	C – 6
90179–10006	B – 2
90179–10696	D – 5
90179–20007	C – 13
90179–22003	D – 2
90179–30691	D – 15
90183–04039	G – 5
90183–05074	E – 5
	F – 5
90183–05076	D – 10
	D – 12
90183–050A0	D – 15
90183–06053	G – 5
90183–060A2	C – 7
90185–10009	E – 10
90185–18167	D – 13
90185–24165	E – 11
90201–047A2	G – 5
90201–05725	F – 15
90201–057H5	G – 5
90201–06016	B – 2
90201–06055	B – 10
90201–06063	E – 4
90201–06071	B – 12
90201–06074	B – 12
90201–06431	C – 10
90201–06589	C – 12
90201–06M30	E – 5
90201–06M31	D – 5
90201–08034	C – 7
90201–081R9	F – 2
90201–08676	E – 13
90201–086P8	E – 11
90201–087G2	C – 7
90201–08M09	E – 13
90201–10013	B – 2

CODIGO Nº	REF. Nº
90201–10021	E – 10
90201–10029	C – 14
90201–10054	C – 7
90201–10118	E – 14
	F – 4
90201–101J1	F – 2
90201–103U4	G – 3
90201–12575	D – 4
90201–12790	G – 3
90201–146F9	F – 2
90201–18013	D – 13
90201–20016	C – 12
90201–20017	C – 12
90201–257H0	D – 2
90201–257R5	E – 11
90201–281U8	D – 15
90202–05123	F – 5
90202–05187	G – 5
90202–30235	D – 15
90208–20001	C – 13
90209–25011	C – 15
90209–28008	C – 15
90214–10002	F – 2
90214–25003	C – 15
90214–25004	C – 15
90214–28002	D – 2
90214–29002	C – 15
90215–30233	D – 2
90267–32161	D – 7
90269–06001	F – 5
90269–06008	F – 14
90269–06011	D – 10
90269–06081	D – 8
	F – 6
	F – 7
	F – 15
90269–07007	F – 5
90269–07076	D – 7
	D – 10
90269–07077	D – 7
	F – 7
90269–08002	D – 13
90282–03001	G – 3
90338–06007	C – 7
90338–06018	D – 6
	D – 10
90338–15004	D – 5
90338–23004	D – 5

CODIGO Nº	REF. Nº
90340–12112	C – 11
90340–14132	B – 14
90340–18150	B – 2
90340–32004	C – 11
90387–05017	D – 8
90387–06023	F – 3
90387–0603J	D – 8
90387–06040	G – 6
90387–06055	E – 4
90387–06057	D – 13
	D – 15
90387–06066	D – 12
90387–06071	D – 8
90387–06087	B – 10
90387–0611K	D – 15
90387–0614M	B – 12
90387–061U9	E – 4
90387–062L2	C – 8
90387–062M9	D – 11
90387–062X0	D – 12
90387–06372	F – 6
90387–063E6	D – 5
90387–065J6	D – 7
	E – 5
	F – 8
90387–06697	F – 3
90387–066Y6	E – 4
90387–07717	D – 12
90387–08005	C – 7
90387–08020	C – 7
90387–08021	C – 7
90387–0804S	D – 4
90387–1012A	D – 12
	D – 14
90387–1013U	D – 13
90387–1211D	D – 4
90387–25007	C – 15
90387–25008	D – 2
90387–28003	C – 15
90387–28004	C – 15
90387–31003	C – 15
90401–10012	E – 9
90401–10172	E – 14
	F – 4
90401–20145	B – 14
90413–07007	E – 5
90413–07023	B – 11
90430–06014	B – 2

CODIGO Nº	REF. Nº
90430–06014	B – 10
90430–06166	C – 9
90430–08143	C – 11
90430–09002	C – 4
90430–10148	G – 3
90445–08022	D – 10
90445–087K6	D – 11
90445–11418	B – 11
90445–19002	F – 2
90446–15386	F – 4
90450–22017	B – 12
90450–32001	B – 10
90450–35001	B – 11
90450–38040	B – 9
	B – 11
90450–62001	B – 15
90461–10002	G – 5
90461–10010	E – 5
90462–08225	C – 10
90464–12036	D – 7
90464–13073	D – 8
	G – 6
90464–13077	G – 6
90464–13249	B – 12
90464–15157	G – 6
90464–15195	F – 14
	G – 6
90464–16005	C – 4
90464–16006	D – 6
90464–16011	D – 12
90464–16012	D – 13
90464–30003	C – 5
90464–30040	C – 4
90464–47001	F – 14
90464–51001	G – 3
90465–04020	D – 8
90465–08013	G – 3
90465–08028	G – 3
90465–08191	G – 3
90467–010A0	F – 4
90467–08075	D – 10
90467–09006	E – 5
90467–11044	B – 11
90467–11090	B – 11
90467–12003	C – 4
90467–120A1	C – 4
90467–120A3	E – 14
90467–12191	B – 12

CODIGO Nº	REF. Nº
90467–14015	C – 2
90467–160A1	B – 15
90467–17128	C – 5
90467–180A0	C – 5
90467–18172	C – 5
90467–200A0	B – 10
	B – 11
90468–12069	B – 5
90480–01333	D – 6
90480–08264	B – 15
90480–10542	E – 4
90480–12005	D – 13
90480–12010	B – 10
90480–12072	D – 7
90480–12314	E – 5
90480–12596	F – 8
90480–12607	F – 3
90480–13010	B – 13
90480–13398	C – 11
90480–14005	D – 5
90480–15363	B – 12
90480–20001	D – 11
90501–064L1	D – 3
90501–12743	F – 3
90501–230A0	C – 13
90506–18008	F – 2
90506–20193	F – 4
90508–164B2	C – 13
90508–32020	D – 4
91314–06014	C – 11
91314–06020	B – 8
91314–06025	E – 5
91314–06035	F – 3
91314–06105	B – 2
91314–08030	D – 15
	E – 3
	E – 13
91314–08040	E – 2
91317–04025	G – 5
91317–05010	E – 4
91317–05012	F – 5
91317–06012	F – 2
91317–06016	E – 4
91317–06025	B – 14
	E – 13
91317–06030	B – 12
91317–06040	B – 9
91317–06090	E – 4

CODIGO Nº	REF. Nº
91380–06014	C – 11
91401–16012	F – 4
91492–12010	C – 3
91701–06018	F – 4
91808–16023	B – 2
91808–30031	B – 9
92014–06014	C – 10
92014–08016	C – 11
92014–08040	C – 7
92017–05030	G – 5
92017–06012	D – 11
92017–06016	D – 12
92017–06025	E – 7
92017–08020	F – 3
92907–05100	C – 3
92907–05600	C – 3
92907–06200	F – 4
92907–08600	C – 13
92990–03100	C – 3
92990–06200	C – 6
93101–12004	D – 4
93102–12372	B – 9
93102–15212	C – 13
93102–40330	D – 2
93106–28043	E – 8
93106–40013	E – 10
93109–17071	D – 12
	D – 14
93210–04092	C – 9
93210–06667	B – 10
	B – 13
93210–09165	B – 13
93210–14003	B – 13
	C – 9
93210–15566	B – 14
93210–16325	C – 11
93210–18397	C – 12
93210–22298	B – 13
93210–22382	C – 10
93210–235A1	B – 10
	B – 11
93210–25711	F – 11
93210–26741	B – 8
93210–27370	B – 10
	C – 10
93210–32172	C – 11
93210–357A2	B – 9
93210–47675	B – 9

INDICE NUMERICO

CODIGO Nº	REF. Nº
93210–49046	B – 11
93210–55669	F – 11
93210–57003	C – 11
93305–20605	C – 15
93306–00106	B – 9
	D – 3
93306–00304	C – 13
93306–00420	E – 8
93306–20124	C – 10
93306–20230	C – 12
93306–20531	E – 10
93306–205A2	D – 2
93306–20652	C – 15
93306–27208	C – 15
93310–232R9	C – 13
93315–31502	C – 13
93315–31758	D – 12
	D – 14
93317–11020	C – 13
93317–11287	D – 4
93317–428U8	D – 12
93317–43580	E – 10
93317–52865	D – 12
93399–99932	D – 15
93420–61M07	E – 10
93440–07149	B – 2
93440–10153	B – 2
93440–28184	C – 15
93440–31187	C – 15
93440–52009	D – 2
93440–62032	D – 2
93501–04011	F – 3
93603–12007	B – 9
93603–17070	B – 9
93605–10108	C – 10
93607–44190	B – 8
93610–20189	C – 10
93900–00030	E – 8
	E – 10
94580–25078	B – 13
94582–10116	E – 11
94591–60122	B – 8
94682–05031	E – 11
94701–00403	B – 2
95024–06012	B – 2
	D – 5
95024–06025	B – 9
95024–10040	D – 5

CODIGO Nº	REF. Nº
95024–10045	D – 5
95027–06008	G – 6
95027–06016	G – 3
95027–06020	D – 4
	D – 5
	E – 4
	G – 2
95027–06030	E – 4
95027–06040	F – 11
95304–06700	D – 4
95307–08600	E – 11
95307–08700	F – 4
95380–05700	F – 11
95604–06200	F – 3
95604–08200	C – 7
95607–05100	F – 15
95607–05200	G – 5
95607–06200	B – 12
	G – 2
95607–08200	E – 13
	F – 5
95607–10200	D – 12
	D – 14
	F – 2
95607–14200	D – 14
95617–08625	B – 2
95707–05500	E – 5
95707–06500	D – 7
95807–06012	G – 5
95807–08030	E – 13
95814–08030	C – 6
95814–08045	C – 7
95817–06050	C – 9
95817–06060	C – 9
95817–06070	C – 9
95817–08040	C – 7
95817–08050	C – 9
95817–08060	C – 9
95827–06016	D – 6
	D – 7
95827–06030	B – 12
97706–04012	F – 12
	F – 15
97707–50014	D – 8
97707–50016	F – 14
97707–50020	G – 3
97707–50514	G – 3
98507–03016	C – 3

CODIGO Nº	REF. Nº
98507–04010	G – 2
98507–05008	C – 3
98507–05014	C – 3
98507–05016	C – 3
98507–05022	G – 2
98507–05025	G – 2
98507–06012	C – 3
98507–06020	C – 4
98707–03016	G – 2
98907–05008	E – 5
98907–05014	E – 5
99001–07600	C – 13
99001–10600	D – 4
99009–10400	C – 14
99241–00080	D – 10
99244–00080	D – 10
99246–00080	D – 10
99480–10018	C – 10
99530–08012	B – 14
99530–10014	C – 9
99530–10114	B – 3
	B – 4

CODIGO Nº	REF. Nº

CODIGO Nº	REF. Nº

CODIGO Nº	REF. Nº